EAGO

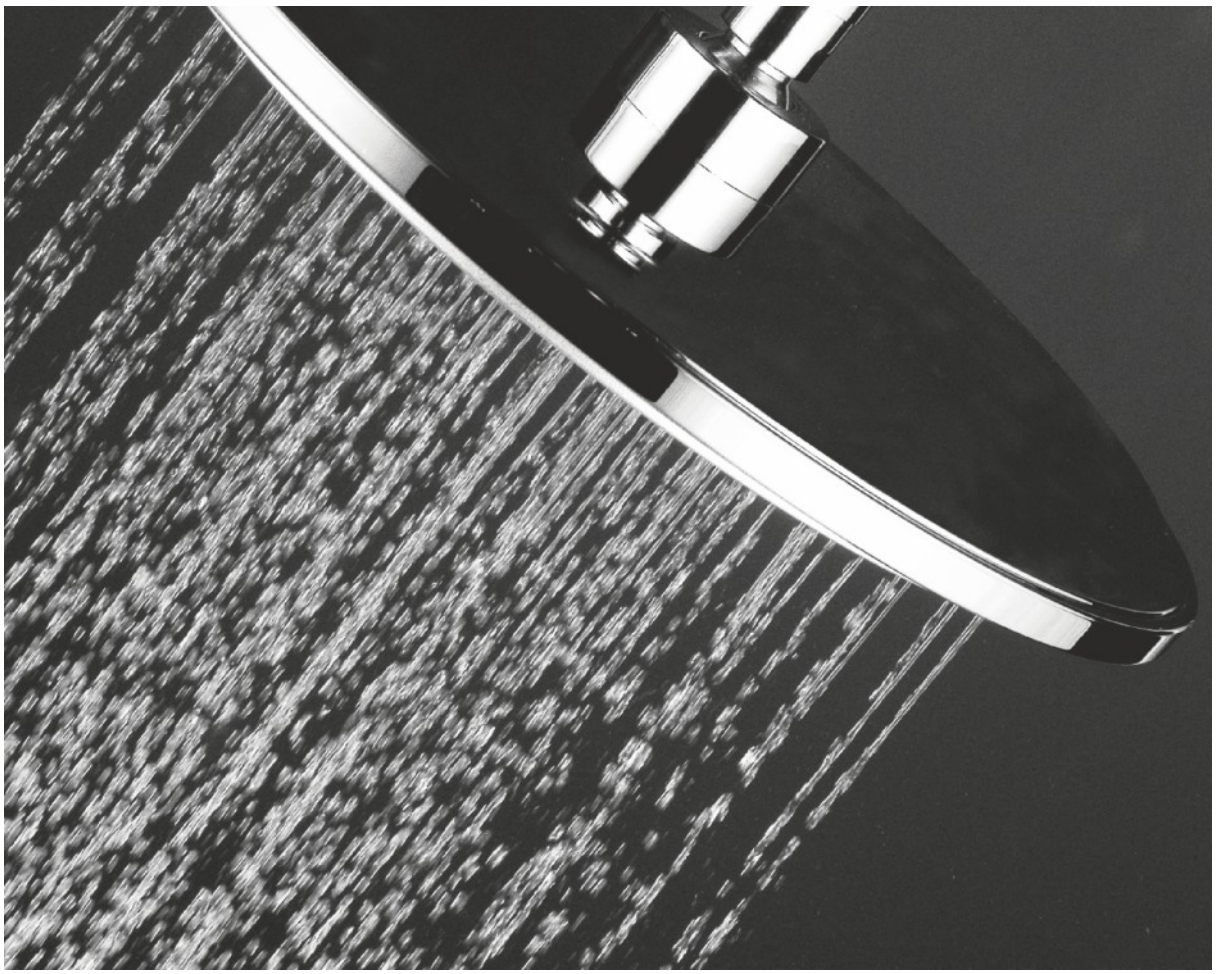

F8 Series
Installations- und Bedienungsanleitung

DE Montage- und Bedienungsanweisung
GB Installation and operation instructions

Hinweise

Sicherheitshinweise

1. Lesen und befolgen Sie die Anleitung.
2. Das Produkt muss mit 16A abgesichert werden.
3. Die Installation muss durch Fachpersonal erfolgen.
4. Verwenden Sie für den Elektroanschluss ein Anschlusskabel mit einem Durchmesser von 2,5mm².
5. Nachträgliche Veränderungen am Produkt sind nicht vorgesehen.
6. Nutzen Sie das Produkt nicht unter Einfluss von Alkohol oder anderen Drogen.
7. Minderjährige dürfen das Produkt nur unter Aufsicht von Erwachsenen benutzen.
8. Nutzen Sie keine Flüssigkeiten wie Schwefelsäure, Salzsäure, Scheuermilch oder Alkali Alkohol zur Reinigung.
9. Bitte berühren Sie kurz nach und während der Nutzung nicht den Dampfauslass oder Dampfgenerator.
10. Das Produkt muss auf gefliesten Boden und gegen eine geflieste Wand montiert werden.
11. Geben Sie das Aromaöl nicht in den Einlass für das Entkalkungsmittel.
12. Achtung: Die Wassertemperatur darf 60 Grad Celsius nicht überschreiten.
13. Achtung: Das Produkt muss mit einem FI-Schutzschalter (30mA) gesichert sein.
14. Lagern Sie das Produkt nicht bei Kälte oder Frost.
15. Das Produkt ist nur für den Einsatz im beheizten Innenraum geeignet.
16. Die beiliegenden Schläuche, Verbindungswinkel, Reduzierungen etc. sind nur für interne Verbindungen im drucklosen Bereich und nicht für den Wasserzulauf geeignet.
17. Der Wasserdruck muss zwischen 2,5 und 5 bar liegen.
18. Das Anschlussmaß für den Wasserzulauf beträgt 1 1/2 Zoll.
19. Die Duschtasse muss mit geeigneten Füllmaterial unterfüttert werden. Dieses ist im Lieferumfang nicht enthalten.

Safety instructions

1. Read and follow the instructions.
2. The product must be connected to a socket that meets the ipx4 rating.
3. Installation of the power unit must be carried out by electrician or distributor.
4. All pump‘s must be grounded.
   The copper core ground wire specification should not be less than 2.5mm².
5. It is not allowed to modify the product, this voids warranty.
6. It is strictly forbidden to use this product after drinking or taking drugs.
7. Minors must be under parental supervision.
8. Do not use the strong corrosive liquids, such as sulfuric acid, hydrochloric acid, alkaline liquor to clean this product.
9. The steam generator heats up while using. Please don´t touch.
10. The product must be mounted on tiled floor and against a tiled wall.
11. The water intake must be kept clear at all times.
12. Do not use water over 60°C, this could damage to the product.
13. The use of this product without GFCI/RCD is prohibited.
14. Store in a warm and dry place.
15. No suitable for outdoor use.
16. The extra hozes and pipes are‘nt suitable for constant presured connections.
    So these can‘t be used to connect the product to the house water system.
17. The water pressure should be between 2,5-5 bar.
18. The product can be connected using 1 1/2 inch reinforced hose.
19. The shower tray must be lined with suitable filling material.
    This is not included in the delivery.

Inhalt/Content

1. Schaltplan.....01
2. Materialbeschreibung.....03
3. Wasser- und Elektroanschluss.....11
4. Montage.....
DZ956F8.....15
DZ959/960F8.....19
DZ961F8.....23
DZ962F8.....28
DZ963/964/965F8.....33
DZ972F8.....37
DZ972-1F8.....44
5. Bedienfeld.....53

1. Wiring principle.....02
2. Spare parts.....07
3. Water- and electricity location.....13
4. Installation.....
DZ956F8.....15
DZ959/960F8.....19
DZ961F8.....23
DZ962F8.....28
DZ963/964/965F8.....33
DZ972F8.....37
DZ972-1F8.....44
5. Control panel.....55

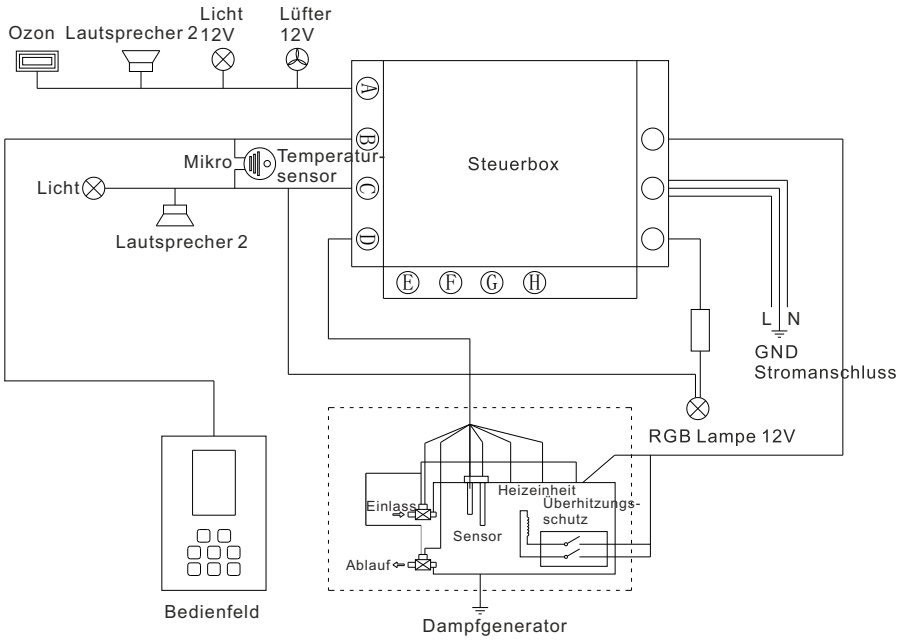

Technische Daten

Konfiguration / Parameter	Pumpe	Dampfgenerator	Licht	Ventilator	Magnetventil	Bedienfeld	Lautsprecher	Notizen
Betriebsspannung		AC220-240V/50HZ	DC12V	DC12V	DC12V	AC220V-240V/ 50HZ		
Betriebsspannung		AC240V/60HZ	DC12V	DC12V	DC12V	AC240V/60HZ		
Nennleistung		3000W	10W	3W	5W		10W	
Nennleistung		4500W	10W	3W	5W		10W	
Nennleistung		6000W	10W	3W	5W		10W	

Wiring principle

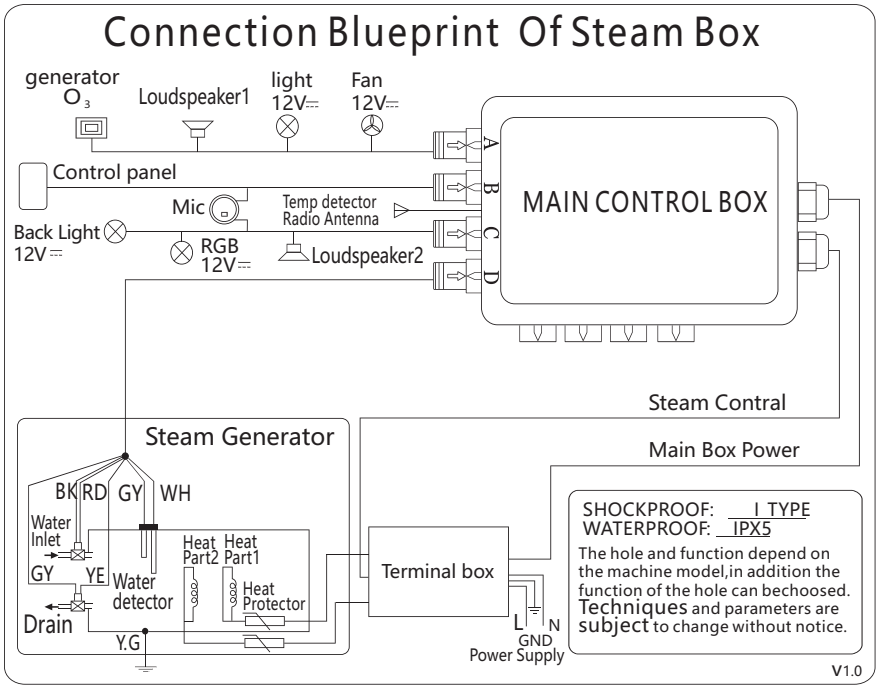

Electrical parameter

Configuration / Parameter	Water pump	Steam generator	Light	Ventilator	Electromagnetic valve	Computer controller	Speaker	Note
Rated operating voltage		AC220-240V/50HZ	DC12V	DC12V	DC12V	AC220V-240V/ 50HZ		
Rated operating voltage		AC240V/60HZ	DC12V	DC12V	DC12V	AC240V/60HZ		
Rated power		3000W	10W	3W	5W		10W	
Rated power		4500W	10W	3W	5W		10W	
Rated power		6000W	10W	3W	5W		10W	

DZ956F8

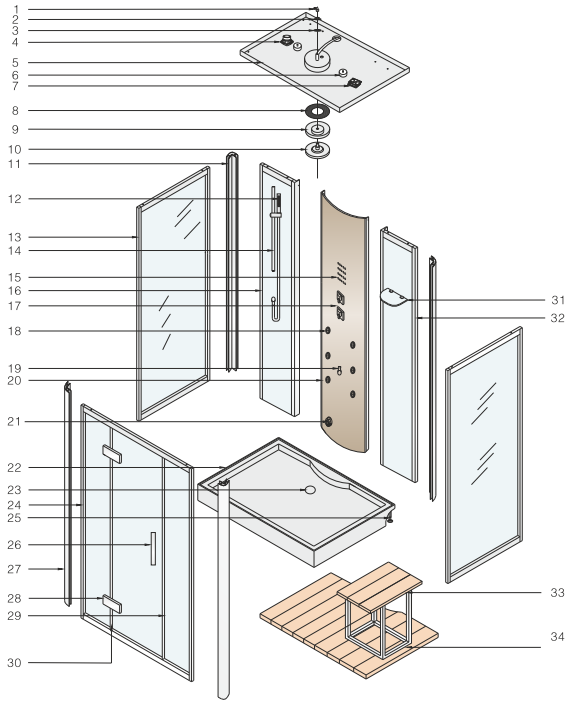

Material

1、4"4 copper elbow	2、1/2" copper nuts	3、4' black plastic gasket	4、Loud speaker	5、Top cover
6、daylight lamp	7、90X90 Ventilator	8、steam room big chromatherapy light	9、acrylic light cover(big)	10、shower head
11、side corner aluminum profile	12、hand shower	13、left side panel	14、Hand shower bracket	15、F8 control panel
16、left back panel	17、faucet	18、Jet	19、cleaning cup	20、mid back panel
21、steam mouth	22、shower base	23、Plastic drainer	24、glass door	25、Adjustable leg
26、H-style handle	27、corner aluminum profile	28、door hinge	29、L008A magnetic strip(6mm)	30、water proof rubber
31、glass shelf	32、right back panel	33、stool	34、solid wood floor	

Zubehör

4x10 self-drilling screws: 16pcs	4x16mm screw with cushion:18pcs	4x20 self-drilling screws: 15pcs

DZ959/960F8

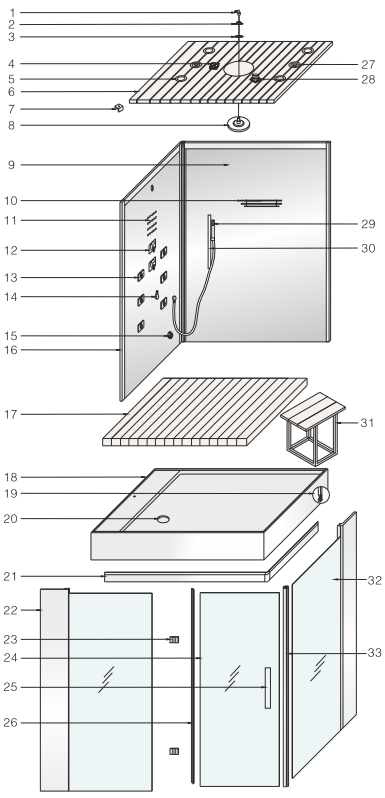

Material

1、4"4 copper elbow	2、1/2" copper screw nuts	3、4' plastic gasket	4、90x90 Ventilator	5、Colorful light
6、Top cover	7、Stainless steel block	8、2063# head shower	9、Back panel	10、Tempered glass shelf
11、F8 control panel	12、Square 3 ways faucet	13、Square jet	14、Cleaning cup	15、Steam mouth
16、Side back panel	17、959 solid wood floor	18、Shower base	19、Adjustable leg	20、Plastic drainer
21、Fixed aluminum profile	22、Front fixed door	23、Door hinge	24、Movable door	25、H-style handle
26、Water proof rubber	27、Daylight lamp	28、Loud speaker	29、Hand shower	30、Up and down hand shower bracket
31、Stool	32、Side fixed door	33、L008A magnetic strip (8mm)		

Zubehör

4x16mm self-locking screw:7pcs	Stainless steel block:5pcs	4x10mm self-locking screw:22pcs	4x50mm self-locking screw:4pcs
2.5mm Hexangular Wrench:1pc	3mm Hexangular Wrench:1pc	4mm Hexangular Wrench:1pc	Binding strip:10pcs

Materialbeschreibung

DZ961F8

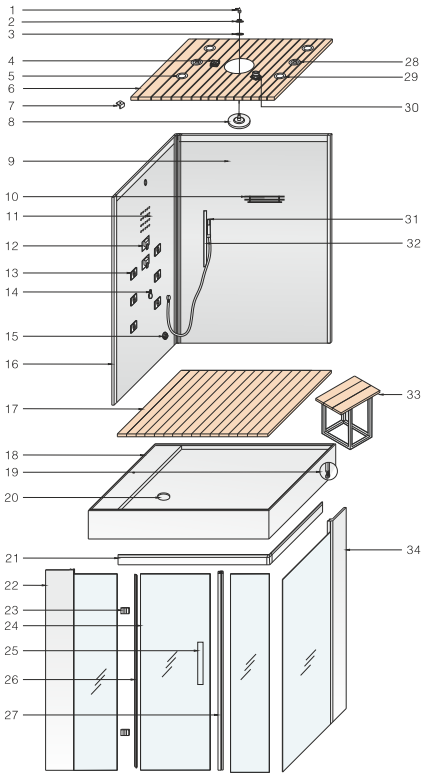

Material

1、4"4 copper elbow	2、1/2" copper nuts	3、4mm plastic seal	4、90X90 Ventilator	5、Colorful light
6、Top cover	7、stainless steel block	8、Head shower	9、back panel	10、Glass shelf
11、F8 computer control panel	12、Square 3 ways faucet	13、Squre jet	14、cleaning cup	15、Steam mouth
16、Side back panel	17、959 solid wood floor	18、shower base	19、Adjustable leg	20、Plastic drainer
21、fixed aluminum profile	22、left fixed door	23、Door hinge	24、movable door	25、H-style handle
26、Movable door	27、Water proof rubber	28、L008A magnetic strip（6mm）	29、Daylight lamp	30、Loud speaker
31、Hand shower	32、Hand shower bracket	33、Stool	34、Right fixed door	

Zubehör

4x10mm self-locking screw:39pcs	stainless steel block:5pcs	4x50mm screw with cushion:4pcs	4x16mm self-locking screw:6pcs
2.5mm Hexangular Wrench:1pcs	3mm Hexangular Wrench:1pcs	4m Hexangular Wrench:1pcs	Binding strip:10pcs

DZ962F8

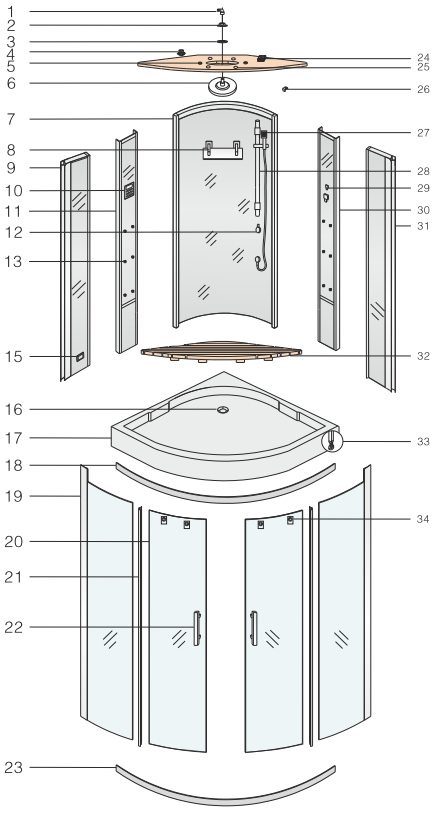

Material

1、4"4 copper elbow	2、1/2" copper nuts	3、4mm plastic seal	4、Loud speaker	5、Daylight lamp
6、Head shower	7、Mid glass panel	8、Tempered glass shelf	9、Left glass panel	10、F8 control panel
11、A back panel	12、cleaning cup	13、Jet		15、Steam outlet
16、Plastic drainer	17、Shower base	18、upper aluminum profile	19、Fixed door	20、Movable door
21、L011B waterproof seal	22、H-style handle	23、Bottom aluminum track	24、Ventilator	25、Colorful light
26、Iron block	27、Hand shower	28、Socket for handshower	29、Spuare 4 ways faucet	30、B back panel
31、Right back panel	32、962 wood floor	33、Adjustable leg	34、Wheels	

Zubehör

4x16 self-locking screws:7pcs	962 block:11pcs	4x10 self-locking screws:33pcs	3.5x30 self-drilling screws:8pcs	4x25 self-drilling screws: 12pcs
3mm hexangular wrench:1pcs	931-1 supporter:4pcs	Binding strip:10pcs	Small cover:12pcs	

DZ963/964/965F8

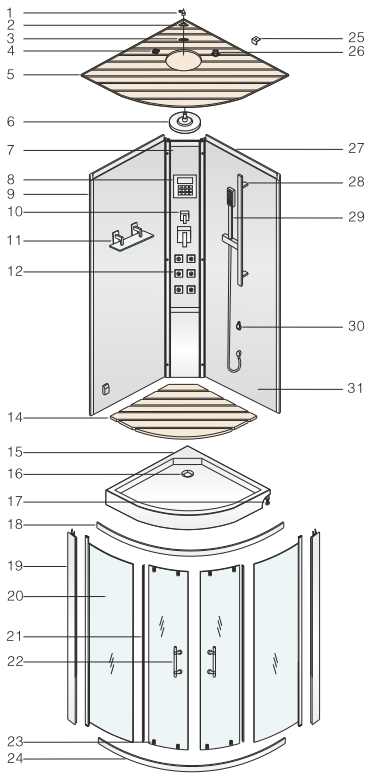

Material

1、4"4 copper elbow	2、1/2" copper nuts	3、4mm plastic seal	4、Ventilator	5、Top cover
6、Head shower	7、Mid glass panel	8、F8 control panel	9、Side glass panel	10、Square 3 ways faucet
11、Shampoo holder	12、Jet		14、963 floor	15、Shower base
16、Plastic drainer	17、Adjustable leg	18、Upper	19、Conner aluminum	20、Fixed panel
21、L011B waterproof seal	22、Handle(big)	23、Wheels	24、Bottom aluminum track	25、962 block
26、Loud speaker	27、Right back panel	28、Hand shower bracket	29、1560 hand shower	30、Cleaning cup
31、Steam outlet				

Zubehör

945 Iron supporter: 2pcs	4x10mm self-locking screw: 29pcs	962 Block: 7pcs	Back panels small cover: 6pcs
3.5x30 Self-drilling screws: 8pcs	4x16 Self-drilling screws: 6pcs	4x25 Self-drilling screws: 6pcs	3mm Hexangular wrench: 1pcs

DZ972F8

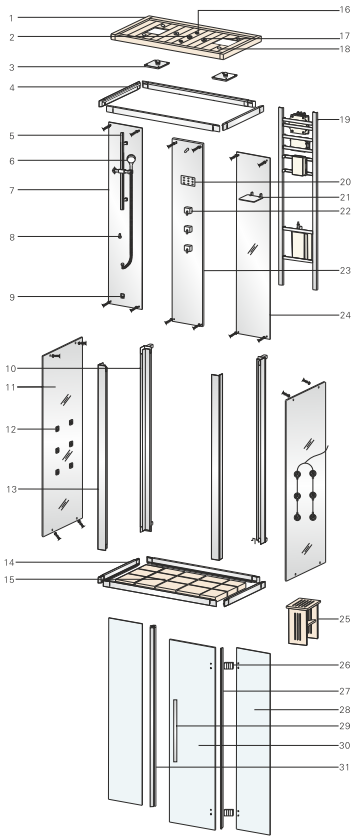

Material

1.Top cover	2.Exhausting fan	3.H-2065 top shower	4.Upper fixed aluminum profile	5.Quadrate lifting support
6.Shower head	7.Left back panel	8.Generator cleaning inlet	9.Quadrate steam outlet	10.Corner aluminum profile (back)
11.Side panel	12.Quadrate jet	13.Corner aluminum profile (front)	14.Lower fixed aluminum profile	15.Bottom pallet
16.Light	17.Speaker	18.LED ceiling lamp	19.Fixed frame	20.Control panel
21.Supporter	22.Thermostatic faucet	23.Middleback panel	24.Right back panel	25.Stool
26.Clip	27.Waterproof seal	28.Front fixed glass	29.Handle(small)	30.Movable door
31.Magnetic stripe				

Zubehör

4x25 flat self locking screw 36pcs	4x20 flat self locking screw 16pcs	Colloidal particle 36pcs	Glass cement (black) 1 pc
2.5mm hexagon wrench 1pc	3 mm hexagon wrench 1pc	4mm hexagon wrench 1pc	Delting 10pcs

Materialbeschreibung

DZ972-1F8

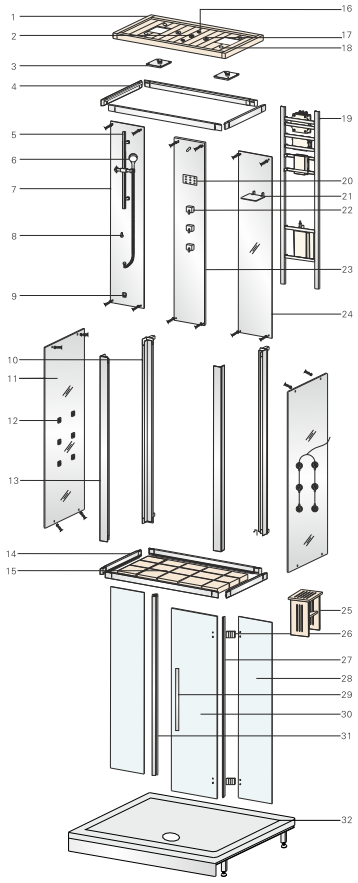

Material

1.Top cover	2.Exhausting fan	3.H-2065 top shower	4.Upper fixed aluminum profile	5.Quadrate lifting support
				
6.Shower head	7.Left back panel	8.Generator cleaning inlet	9.Quadrate steam outlet	10.Corner aluminum profile (back)
				
11.Side panel	12.Quadrate jet	13.Corner aluminum profile (front)	14.Lower fixed aluminum profile	15.Bottom pallet
				
16.Light	17.Speaker	18.LED ceiling lamp	19.Fixed frame	20.Control panel
				
21.Supporter	22.Faucet and deviator	23.Middleback panel	24.Right back panel	25.Stool
				
26.Clip	27.Waterproof seal	28.Front fixed glass	29.Handle(small)	30.Movable door
				
31.Magnetic stripe	32.Tray			
				

Zubehör

4x25 flat self locking screw 36pcs	4x20 flat self locking screw 16pcs	Colloidal particle 36pcs	Glass cement (black) 1 pc
			
2.5mm hexagon wrench 1pc	3 mm hexagon wrench 1pc	4mm hexagon wrench 1pc	Delting 10pcs
			

DZ956F8

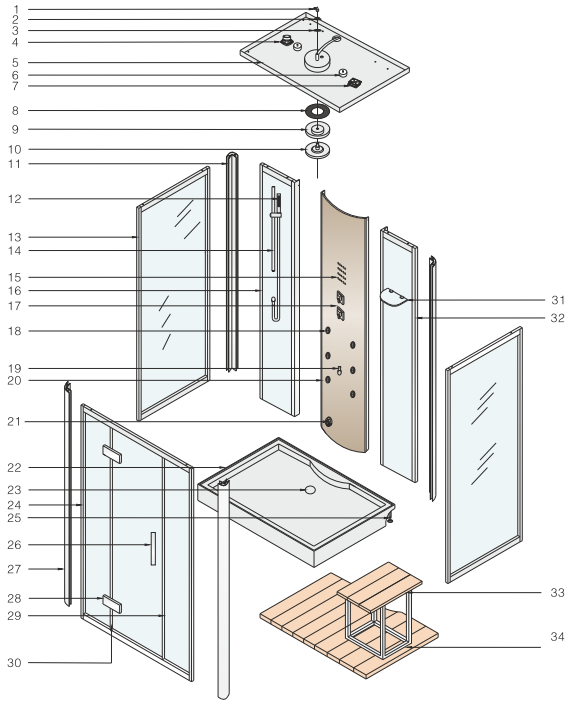

Parts

1、4"4 copper elbow	2、1/2" copper nuts	3、4' black plastic gasket	4、Loud speaker	5、Top cover
6、daylight lamp	7、90X90 Ventilator	8、steam room big chromatherapy light	9、acrylic light cover(big)	10、shower head
11、side corner aluminum profile	12、hand shower	13、left side panel	14、Hand shower bracket	15、F8 control panel
16、left back panel	17、faucet	18、Jet	19、cleaning cup	20、mid back panel
21、steam mouth	22、shower base	23、Plastic drainer	24、glass door	25、Adjustable leg
26、H-style handle	27、corner aluminum profile	28、door hinge	29、L008A magnetic strip(6mm)	30、water proof rubber
31、glass shelf	32、right back panel	33、stool	34、solid wood floor	

Parts package

4x10 self-drilling screws: 16pcs	4x16mm screw with cushion:18pcs	4x20 self-drilling screws: 15pcs

DZ959/960F8

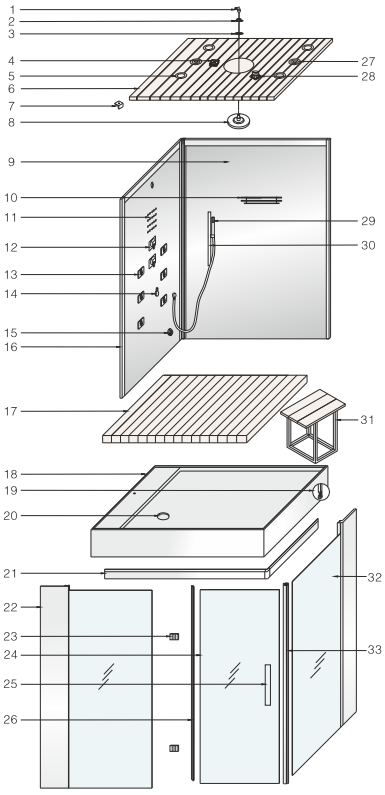

Parts

1、4"4 copper elbow	2、1/2" copper screw nuts	3、4' plastic gasket	4、90x90 Ventilator	5、Colorful light
6、Top cover	7、Stainless steel block	8、2063# head shower	9、Back panel	10、Tempered glass shelf
11、F8 control panel	12、Square 3 ways faucet	13、Square jet	14、Cleaning cup	15、Steam mouth
16、Side back panel	17、959 solid wood floor	18、Shower base	19、Adjustable leg	20、Plastic drainer
21、Fixed aluminum profile	22、Front fixed door	23、Door hinge	24、Movable door	25、H-style handle
26、Water proof rubber	27、Daylight lamp	28、Loud speaker	29、Hand shower	30、Up and down hand shower bracket
31、Stool	32、Side fixed door	33、L008A magnetic strip (8mm)		

Parts package

4x16mm self-locking screw:7pcs	Stainless steel block:5pcs	4x10mm self-locking screw:22pcs	4x50mm self-locking screw:4pcs
2.5mm Hexangular Wrench:1pc	3mm Hexangular Wrench:1pc	4mm Hexangular Wrench:1pc	Binding strip:10pcs

Spare parts

DZ961F8

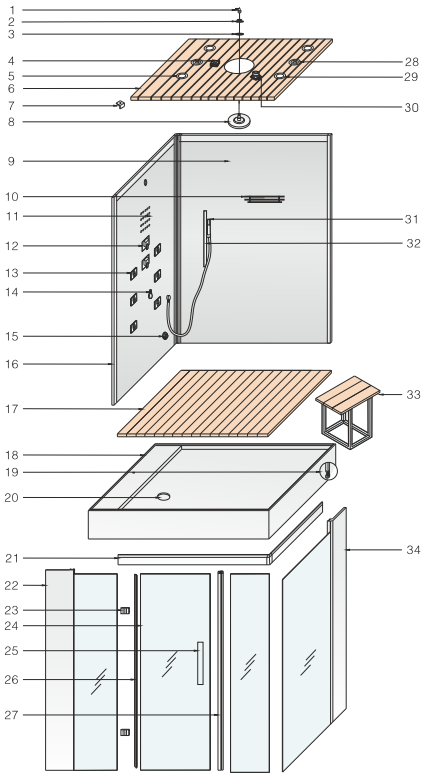

Parts

1、4"4 copper elbow	2、1/2" copper nuts	3、4mm plastic seal	4、90X90 Ventilator	5、Colorful light
6、Top cover	7、stainless steel block	8、Head shower	9、back panel	10、Glass shelf
11、F8 computer control panel	12、Square 3 ways faucet	13、Squre jet	14、cleaning cup	15、Steam mouth
16、Side back panel	17、959 solid wood floor	18、shower base	19、Adjustable leg	20、Plastic drainer
21、fixed aluminum profile	22、left fixed door	23、Door hinge	24、movable door	25、H-style handle
26、Movable door	27、Water proof rubber	28、L008A magnetic strip（6mm）	29、Daylight lamp	30、Loud speaker
31、Hand shower	32、Hand shower bracket	33、Stool	34、Right fixed door	

Parts package

4x10mm self-locking screw:39pcs	stainless steel block:5pcs	4x50mm screw with cushion:4pcs	4x16mm self-locking screw:6pcs
2.5mm Hexangular Wrench:1pcs	3mm Hexangular Wrench:1pcs	4m Hexangular Wrench:1pcs	Binding strip:10pcs

DZ962F8

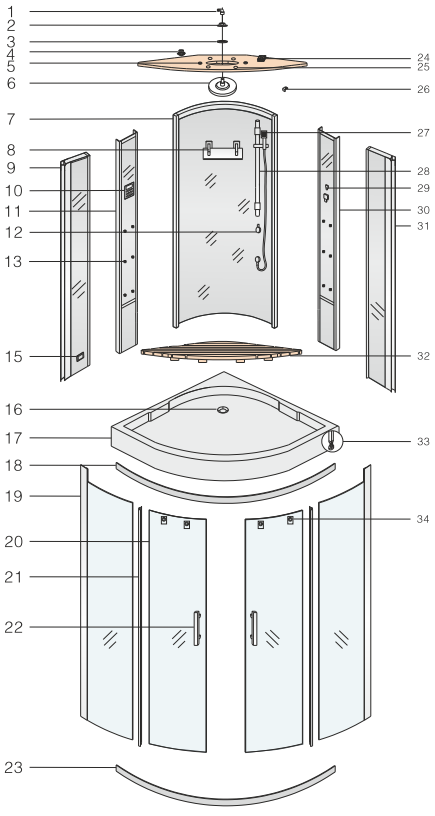

Parts

1、4"4 copper elbow	2、1/2" copper nuts	3、4mm plastic seal	4、Loud speaker	5、Daylight lamp
6、Head shower	7、Mid glass panel	8、Tempered glass shelf	9、Left glass panel	10、F8 control panel
11、A back panel	12、cleaning cup	13、Jet		15、Steam outlet
16、Plastic drainer	17、Shower base	18、upper aluminum profile	19、Fixed door	20、Movable door
21、L011B waterproof seal	22、H-style handle	23、Bottom aluminum track	24、Ventilator	25、Colorful light
26、Iron block	27、Hand shower	28、Socket for handshower	29、Spuare 4 ways faucet	30、B back panel
31、Right back panel	32、962 wood floor	33、Adjustable leg	34、Wheels	

Parts package

4x16 self-locking screws:7pcs	962 block:11pcs	4x10 self-locking screws:33pcs	3.5x30 self-drilling screws:8pcs	4x25 self-drilling screws: 12pcs
3mm hexangular wrench:1pcs	931-1 supporter:4pcs	Binding strip:10pcs	Small cover:12pcs	

DZ963/964/965F8

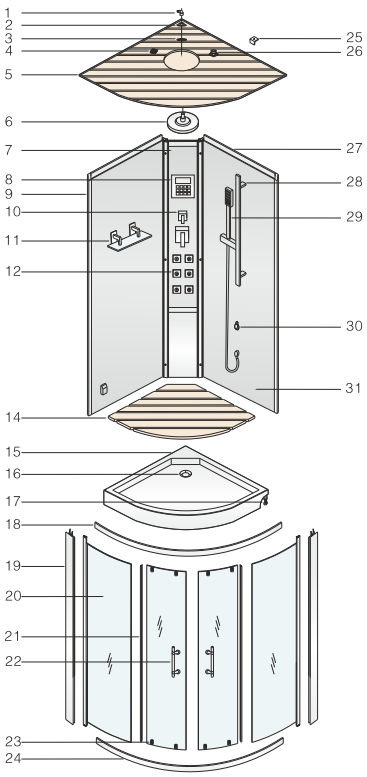

Parts

1、4"4 copper elbow	2、1/2" copper nuts	3、4mm plastic seal	4、Ventilator	5、Top cover
6、Head shower	7、Mid glass panel	8、F8 control panel	9、Side glass panel	10、Square 3 ways faucet
11、Shampoo holder	12、Jet		14、963 floor	15、Shower base
16、Plastic drainer	17、Adjustable leg	18、Upper	19、Conner aluminum	20、Fixed panel
21、L011B waterproof seal	22、Handle(big)	23、Wheels	24、Bottom aluminum track	25、962 block
26、Loud speaker	27、Right back panel	28、Hand shower bracket	29、1560 hand shower	30、Cleaning cup
31、Steam outlet				

Parts package

945 Iron supporter: 2pcs	4x10mm self-locking screw: 29pcs	962 Block: 7pcs	Back panels small cover: 6pcs
3.5x30 Self-drilling screws: 8pcs	4x16 Self-drilling screws: 6pcs	4x25 Self-drilling screws: 6pcs	3mm Hexangular wrench: 1pcs

DZ972F8

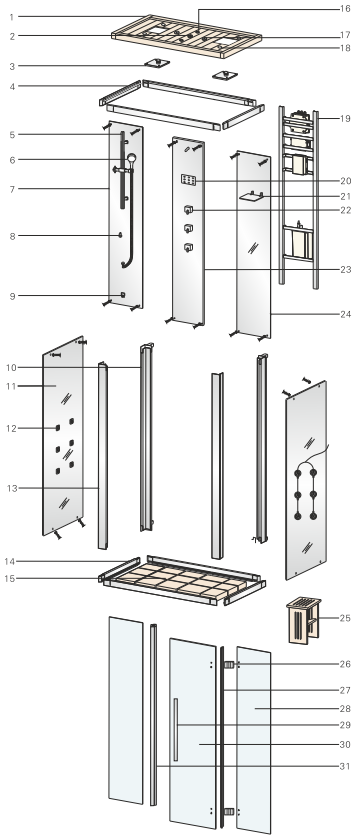

Parts

1.Top cover	2.Exhausting fan	3.H-2065 top shower	4.Upper fixed aluminum profile	5.Quadrate lifting support
6.Shower head	7.Left back panel	8.Generator cleaning inlet	9.Quadrate steam outlet	10.Corner aluminum profile (back)
11.Side panel	12.Quadrate jet	13.Corner aluminum profile (front)	14.Lower fixed aluminum profile	15.Bottom pallet
16.Light	17.Speaker	18.LED ceiling lamp	19.Fixed frame	20.Control panel
21.Supporter	22.Thermostatic faucet	23.Middleback panel	24.Right back panel	25.Stool
26.Clip	27.Waterproof seal	28.Front fixed glass	29.Handle(small)	30.Movable door
31.Magnetic stripe				

Parts package

4x25 flat self locking screw 36pcs	4x20 flat self locking screw 16pcs	Colloidal particle 36pcs	Glass cement (black) 1 pc
2.5mm hexagon wrench 1pc	3 mm hexagon wrench 1pc	4mm hexagon wrench 1pc	Delting 10pcs

Spare parts

DZ972-1F8

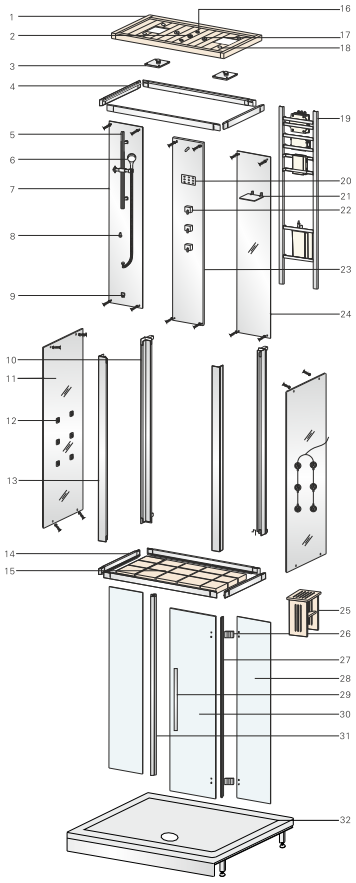

Parts

1.Top cover	2.Exhausting fan	3.H-2065 top shower	4.Upper fixed aluminum profile	5.Quadrate lifting support
				
6.Shower head	**7.Left back panel**	**8.Generator cleaning inlet**	**9.Quadrate steam outlet**	**10.Corner aluminum profile (back)**
				
11.Side panel	**12.Quadrate jet**	**13.Corner aluminum profile (front)**	**14.Lower fixed aluminum profile**	**15.Bottom pallet**
				
16.Light	**17.Speaker**	**18.LED ceiling lamp**	**19.Fixed frame**	**20.Control panel**
				
21.Supporter	**22.Faucet and deviator**	**23.Middleback panel**	**24.Right back panel**	**25.Stool**
				
26.Clip	**27.Waterproof seal**	**28.Front fixed glass**	**29.Handle(small)**	**30.Movable door**
				
31.Magnetic stripe	**32.Tray**			
				

Parts package

4x25 flat self locking screw 36pcs	4x20 flat self locking screw 16pcs	Colloidal particle 36pcs	Glass cement (black) 1 pc
			
2.5mm hexagon wrench 1pc	**3 mm hexagon wrench 1pc**	**4mm hexagon wrench 1pc**	**Delting 10pcs**
			

DZ956F8

Maße: 1500x900x2220mm

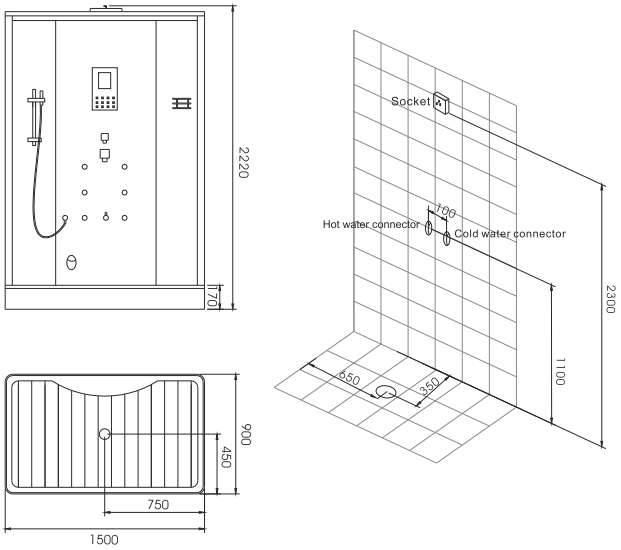

DZ959/960F8

Maße: DZ959F8 1200x900x2265mm(linke Seite)
DZ960F8 1000x900x2265mm(linke Seite)

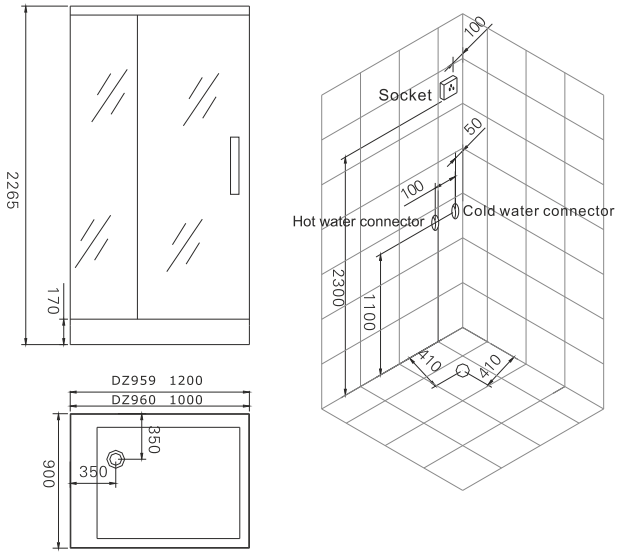

DZ961F8

Maße: 1500x900x2265mm(linke Seite)

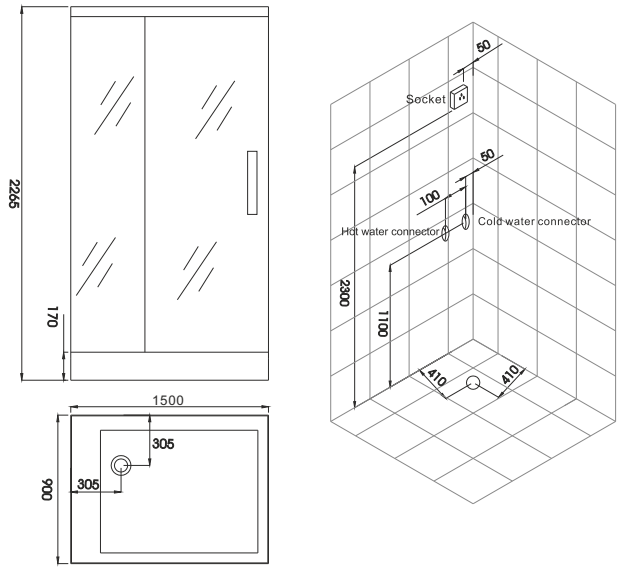

DZ962F8

Maße: 1200x1200x2260mm

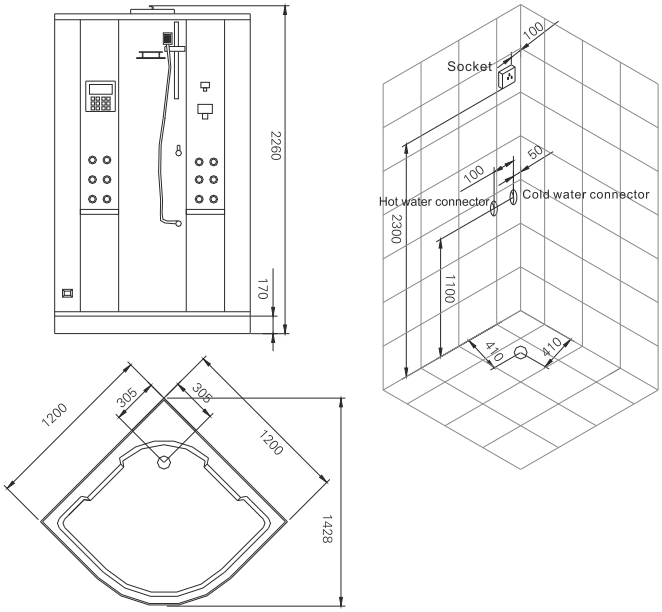

Verbindung

DZ963/964/965F8

Maße: DZ963F8 1000x1000x2260mm
DZ964F8 950x950x2260mm
DZ965F8 900x900x2260mm

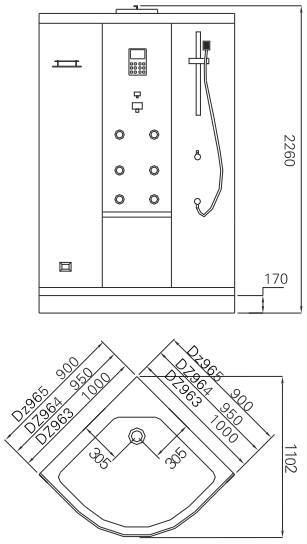

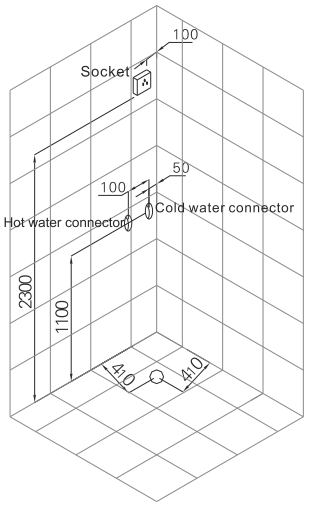

DZ972F8

Maße: 1500x945x2210mm

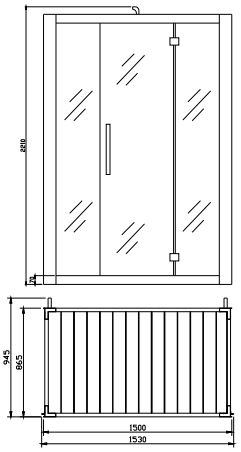

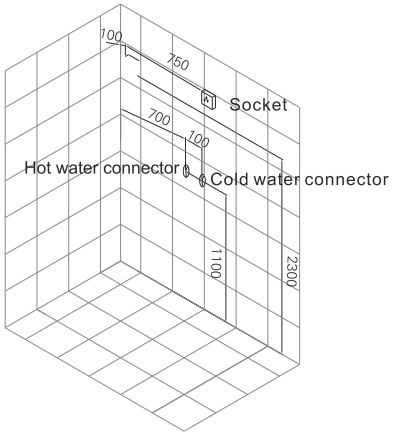

DZ972-1F8

Maße: 1500x945x2210mm

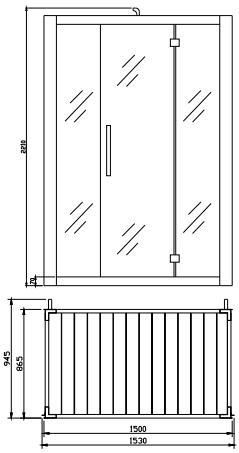

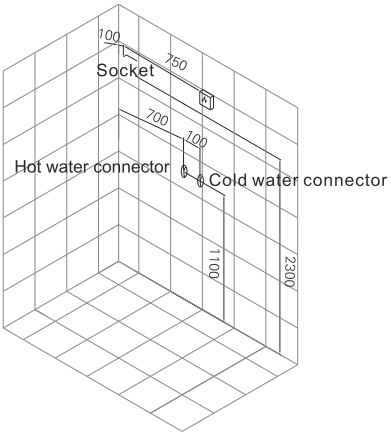

DZ956F8

Size: 1500x900x2220mm

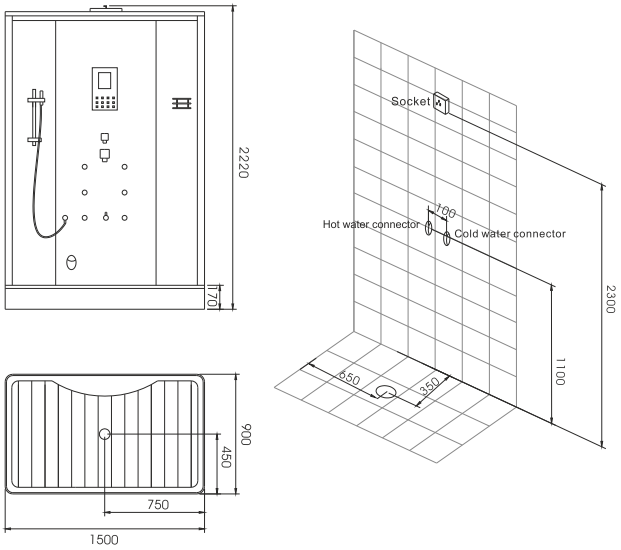

DZ959/960F8

Size: DZ959F8 1200x900x2265mm(linke Seite)
DZ960F8 1000x900x2265mm(linke Seite)

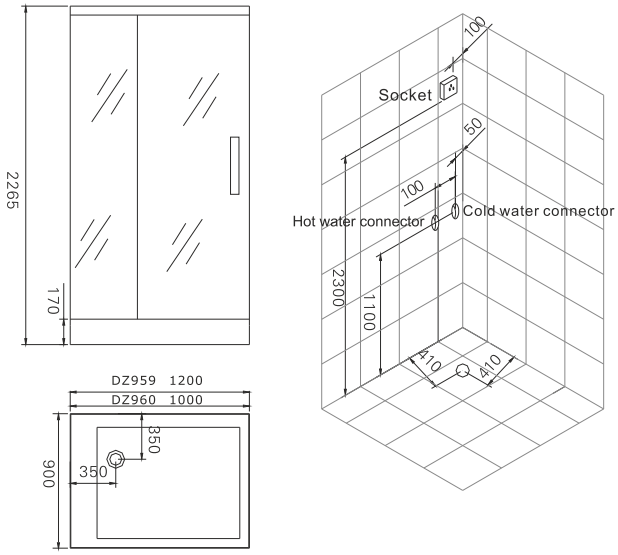

DZ961F8

Size: 1500x900x2265mm(linke Seite)

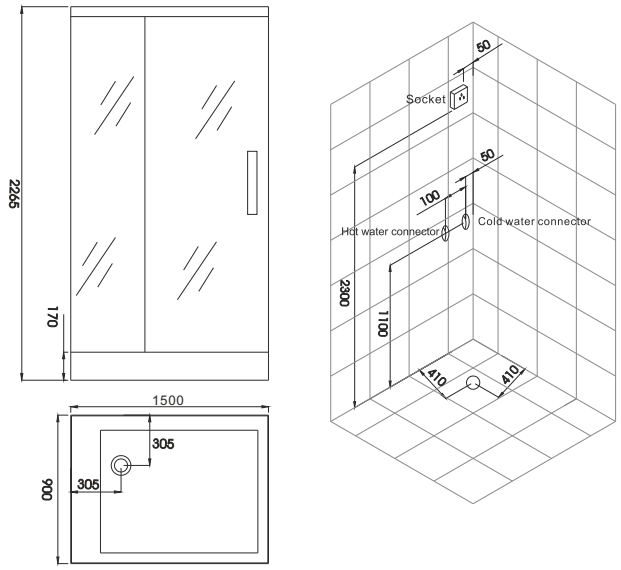

DZ962F8

Size: 1200x1200x2260mm

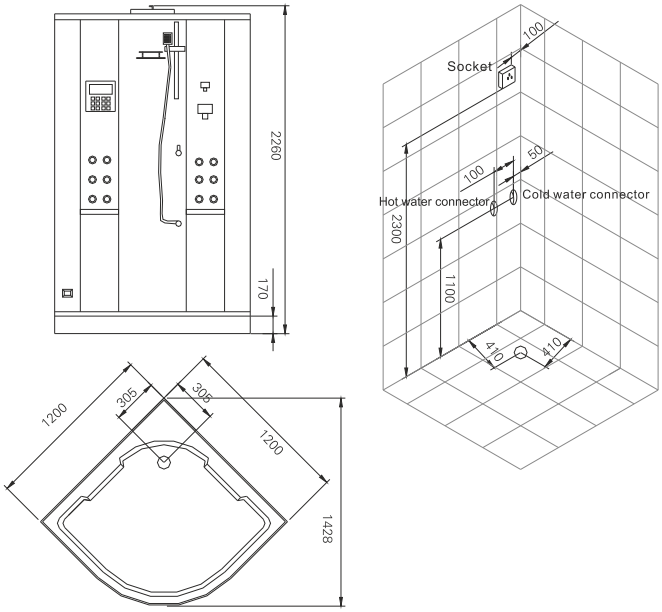

Connection

DZ963/964/965F8

Size: DZ963F8 1000x1000x2260mm
DZ964F8 950x950x2260mm
DZ965F8 900x900x2260mm

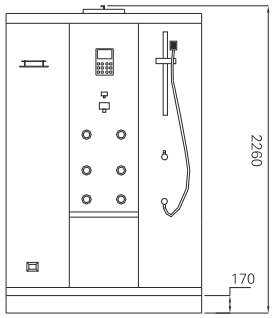

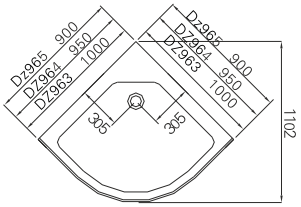

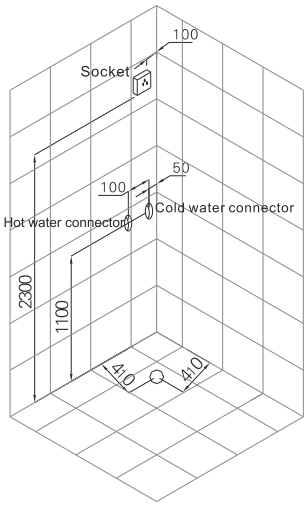

DZ972F8

Size: 1500x945x2210mm

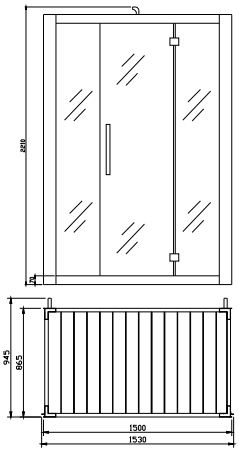

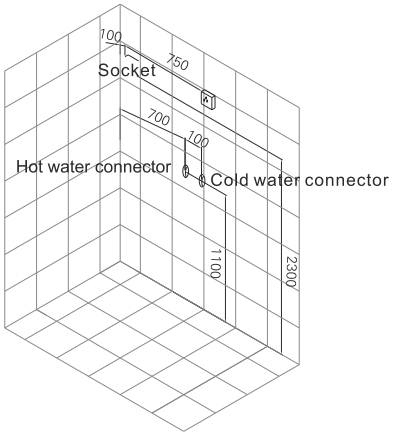

DZ972-1F8

Size: 1500x945x2210mm

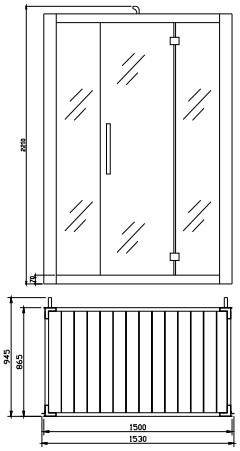

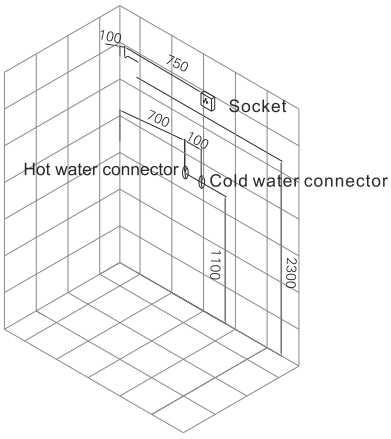

Schritt 1

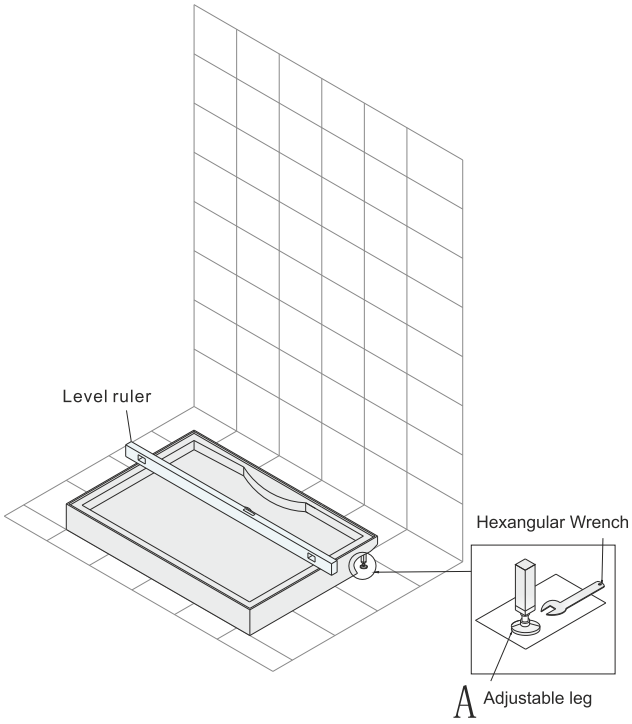

Schritt 2

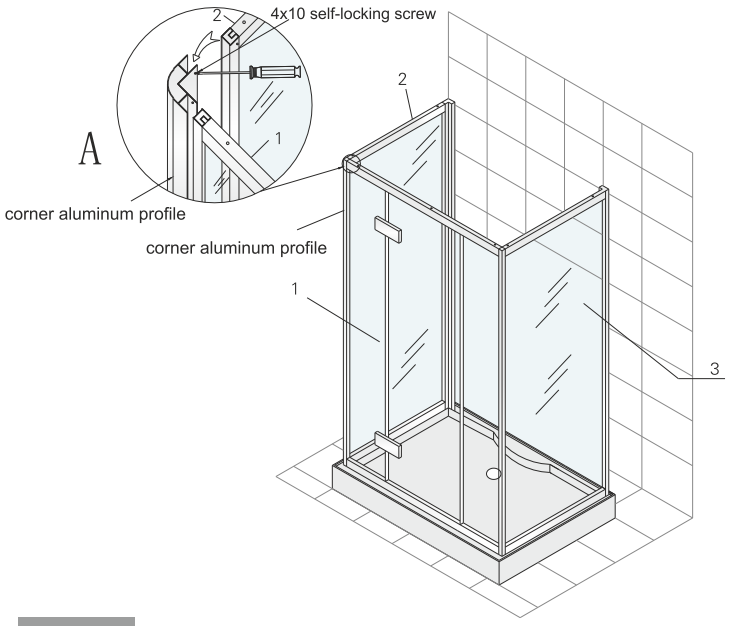

Step 1

Install the shower base

1. Take the shower base out from the carton and put it on the floor carefully.
2. Put the level ruler on the shower base to check whether the shower base is level. If not, please use a Wrench to adjust the adjusting legs to make the shower base become level. Illustrated in the drawing A.

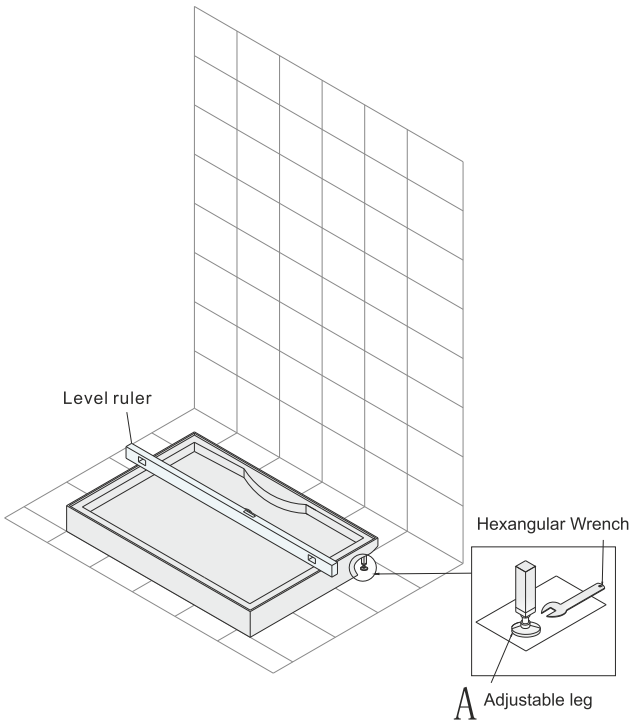

Step 2

Install the Side Panels and the Fixed Doors

1. Put the No.1 left fixed door on the base carefully. Ask one person to stand beside to hold it on.
2. Insert the Left Corner Aluminum Profile into the No.1 fixed door, and then use 4x10mm self-locking screws to fix them well. Illustrated in the drawing A.
3. Put the No.2 left side panel on the shower base, and insert it to the Left Corner Aluminum Profile as well. Then use a Phillip Screwdriver to fix them with 4x10mm self-locking screws. (**Note**: For the Corner Aluminum Profile, the upper side with holes on the top, so please not install it in a wrong way.)
4. Use the same way to install the No.3 side panel and fix to the fixed door as well.

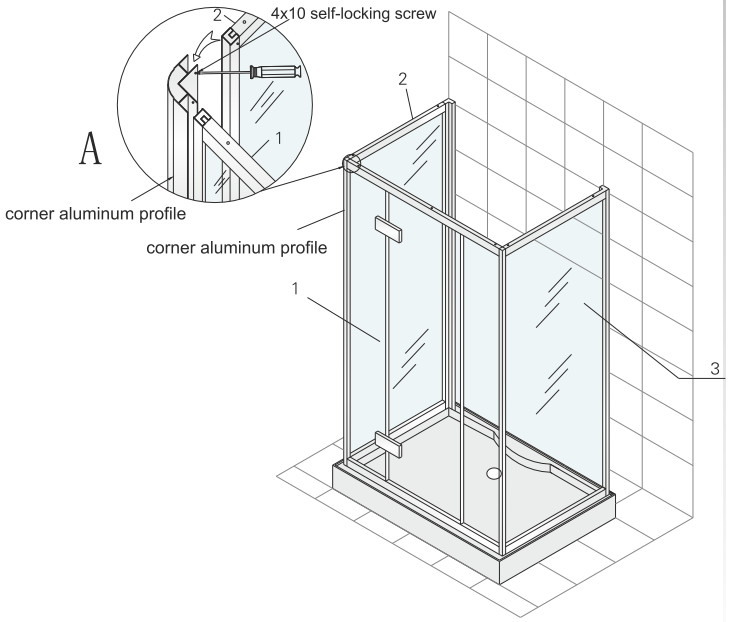

Montage/Installation-DZ956F8

Schritt 3

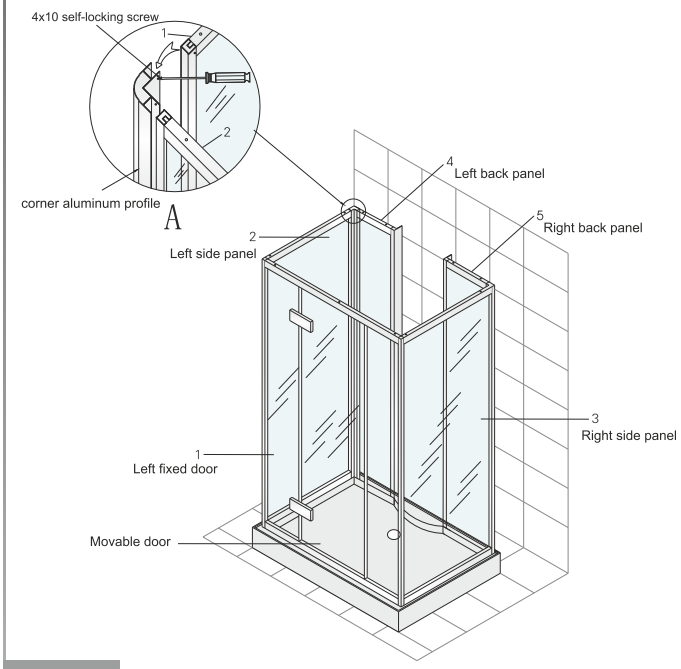

Schritt 4

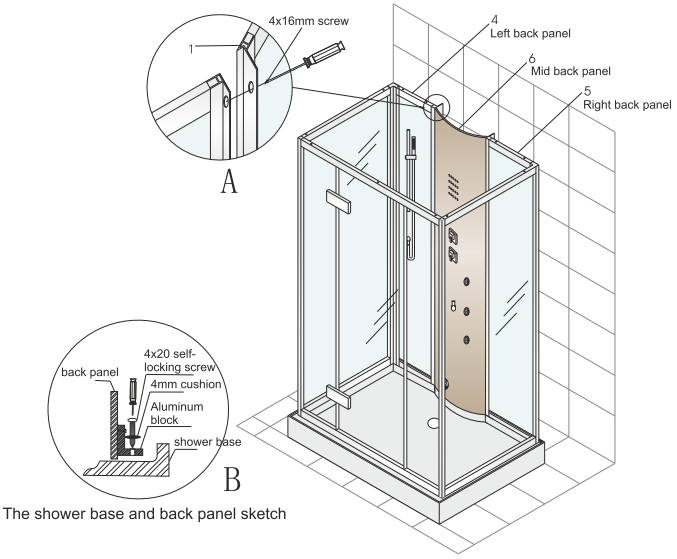

The shower base and back panel sketch

Step 3

Install right and left back panels

1. Put another Corner Aluminum Profile on the shower base and insert it to the No.2 side panel, then use a Phillip Screwdriver to fix them well with 4x10mm self-locking screws. Illustrated in the drawing A.(**Note**: For the Corner Aluminum Profile, the flat end is the upper side, please don't put it in a wrong position while installing.)
2. Put the No.4 left back panel on the shower base, and insert it to the Corner Aluminum Profile, then use a Phillip Screwdriver to fix No.4 and No.2 panels with 4x10mm self-locking screws. Use the same way to install No.5 right back panel, and fix it to the No.3 side panel.

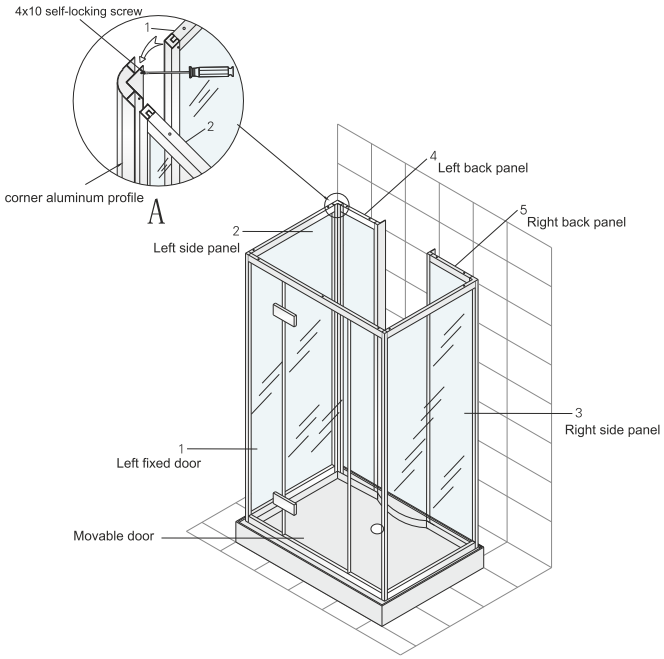

Step 4

Install the Mid Back Panel

1. Put the No.6 mid back panel on the shower base, and use a Phillip Screwdriver to fix it to No.4 and No.5 back panels with 4x16mm screws, illustrated in the drawing A.
2. Use a Phillip Screwdriver to fix all the back panels to the shower base with 4x20mm self-locking screws. Illustrated in the drawing B.

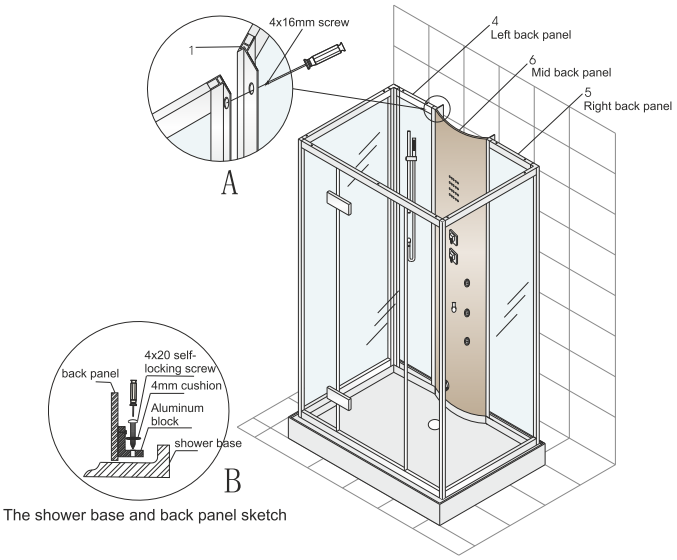

The shower base and back panel sketch

Schritt 5

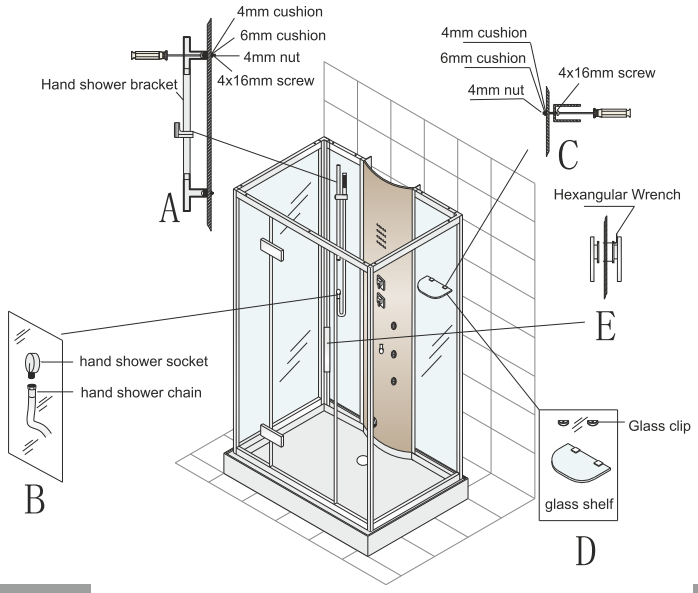

Schritt 6

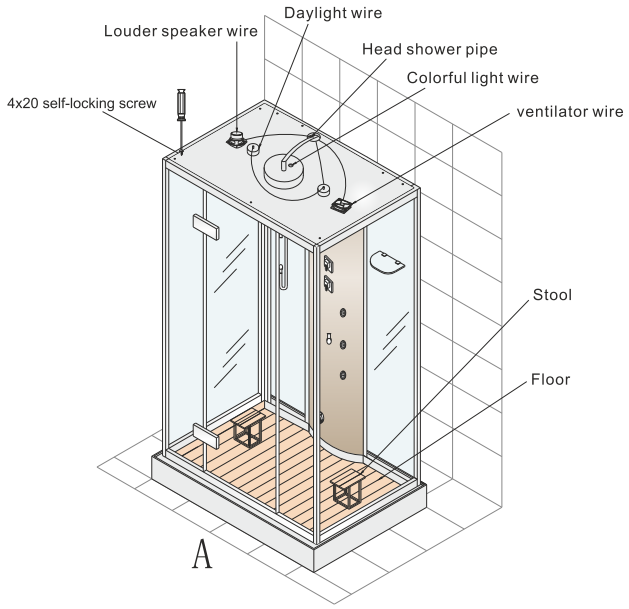

Step 5

Install Accessories

1. Install the Up and Down Hand Shower Socket: Use a Phillip Screwdriver to install the Up and Down Hand Shower Socket to the back panel with 4x16mm screws, 4mm plastic cushion, 6mm plastic cushion and 4mm nuts. Illustrated in the drawing A.
2. Connect the hand shower chain to the hand shower socket. Illustrated in the drawing B.
3. Install the Glass Shelf: Use a Phillip Screwdriver to fix the Glass Clip to the back panel with 4x16mm screws, 4mm plastic cushion, 6mm plastic cushion and 4mm nuts, illustrated in the drawing C. Then put the Glass Shampoo Holder on the track of Glass Clip and use a Phillip Screwdriver to fix them well. Illustrated in the drawing D.
4. Use a Hexangular Wrench to fix the handle to the Movable Door. Illustrated in the drawing E.

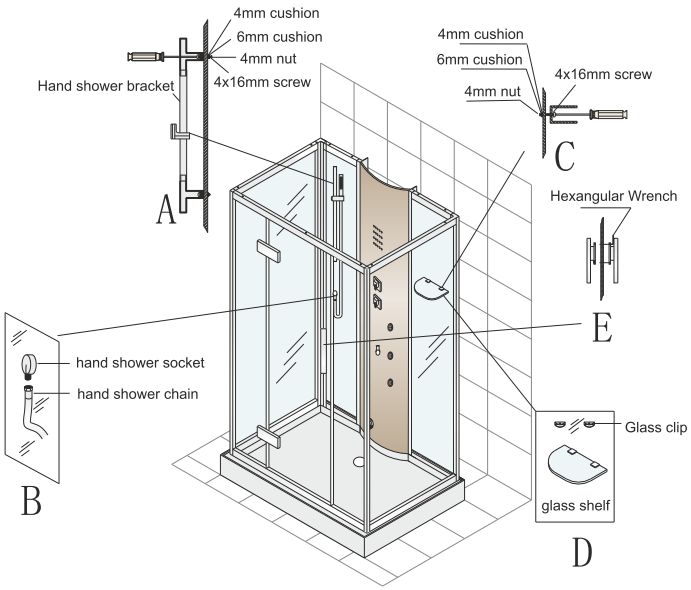

Step 6

Install Top Cover and Connect Fittings

1. Put the top cover onto the top of the back panels and doors, illustrated in the drawing A. Then use a Phillip Screwdriver to fix the top cover to all the back panels with 4x20mm self-locking screws.
2. Put the solid wood floor in the steam shower carefully.
3. Find out the Ventilator sign, the Lamp sign, and the Loud Speaker sign which are on the behind of the back panel, then connect the relative wires of these spare parts to the relative sockets. Illustrated in the following drawing.

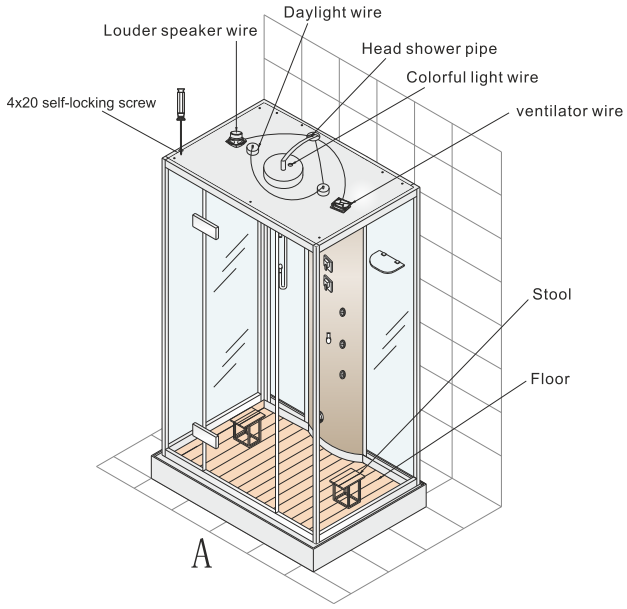

Montage/Installation

Schritt 7

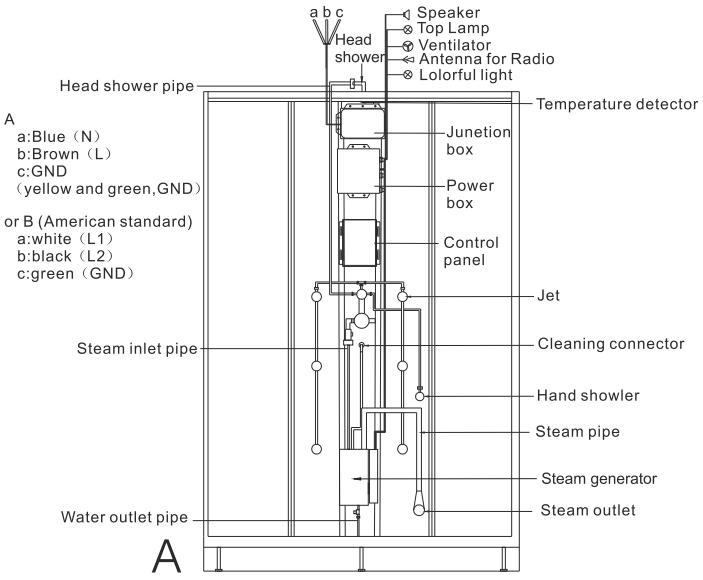

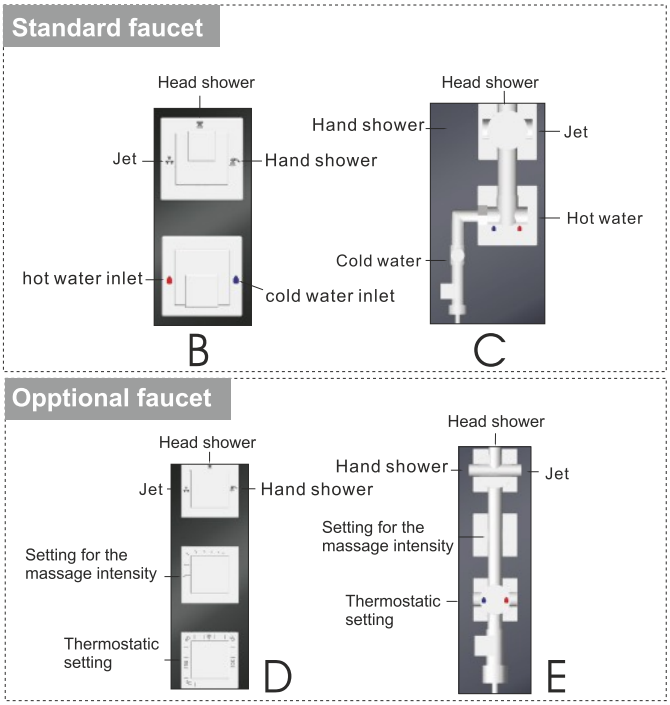

Step 7

Connect Fittings and Water Pipes

1. Connect the head shower pipe to the head shower joint. Connect the water outlet pipe to the shower base and connect the steam pipe to the steam outlet, illustrated in the drawing A.
2. Connect the hot water inlet pipe and the cold water inlet pipe separately to the relative joints. Illustrated in drawing A, B and C.
3. Especially note: The thermostatic faucet is an optional function, just when customers require to install this spare part and we will do, the standard steam shower is without the thermostatic function. Illustrated in drawing D and E.

Note: Before use the steam shower, please try to test whether all the functions are ok.

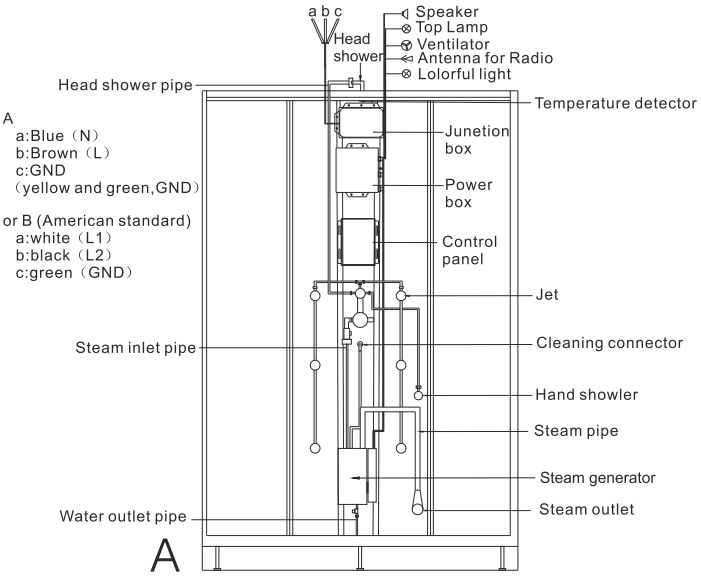

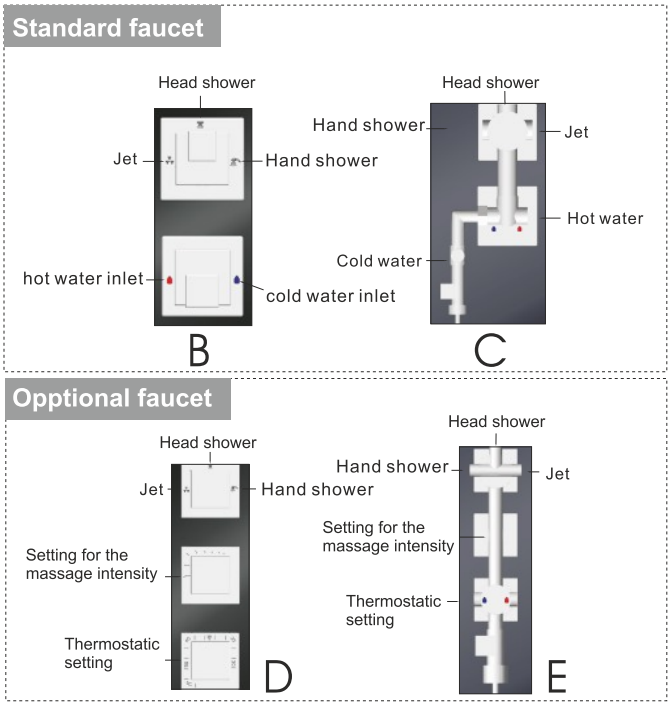

Schritt 1

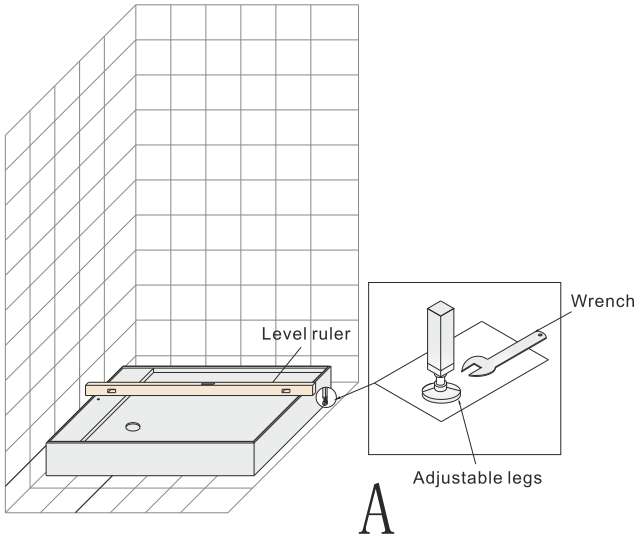

Schritt 2

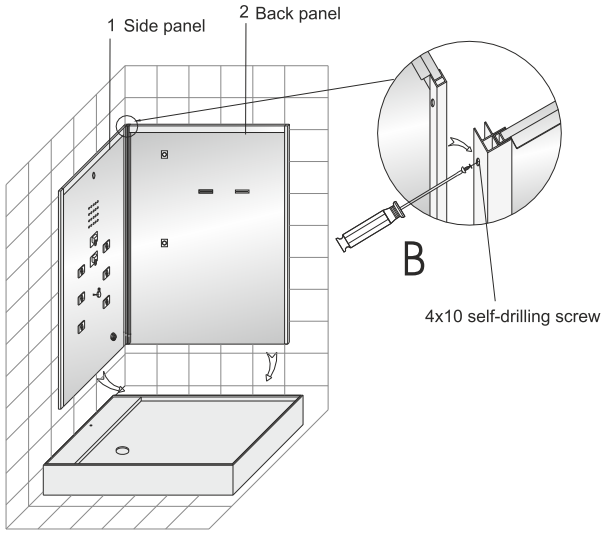

Step 1

Install the shower base
1. Take the shower base out from the carton and put it on the floor carefully.
2. Put the level ruler on the shower base to check whether the shower base is level. If not, please use a Wrench to adjust the adjusting legs to make the shower base become level. Illustrated in the drawing A.

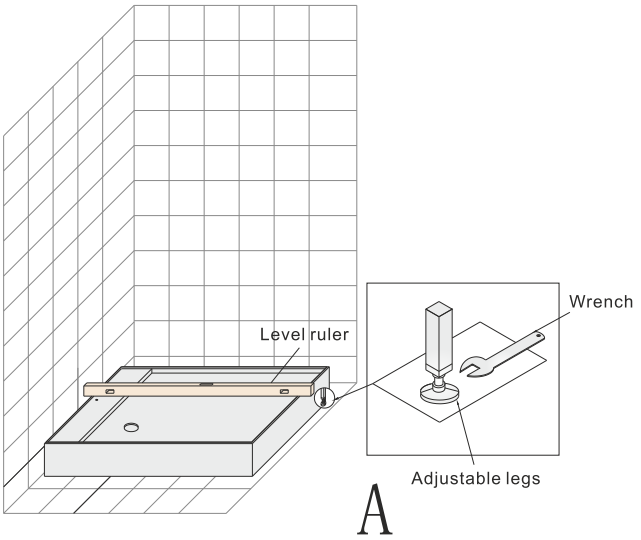

Step 2

Install the back panels
1. Take the No.1 side back panel out of the carton and put it on the shower base carefully. Please be sure to make one person to stand beside to hold it on safely.
2. Take the No.2 back panel out and put it beside of the No.1 panel carefully. Insert the No.2 panel to the aluminum profile of No.1 panel. Then make one person hold on the No.1 and No.2 panels, the other person uses a Phillip Screwdriver to fix them with 4x10mm self-locking screws. Illustrated in drawing B.

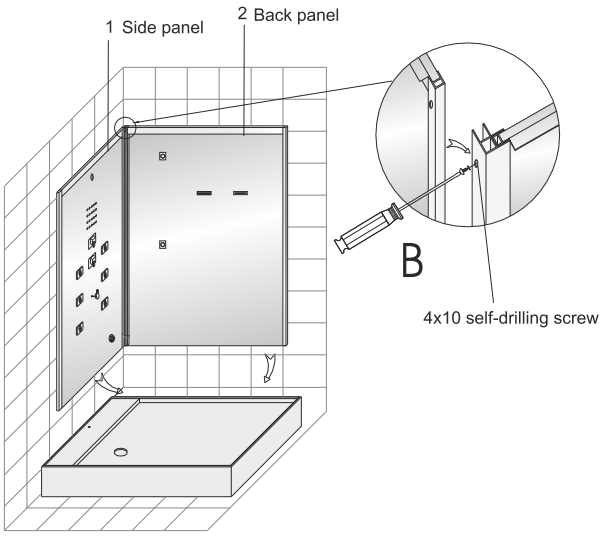

Montage/Installation

Schritt 3

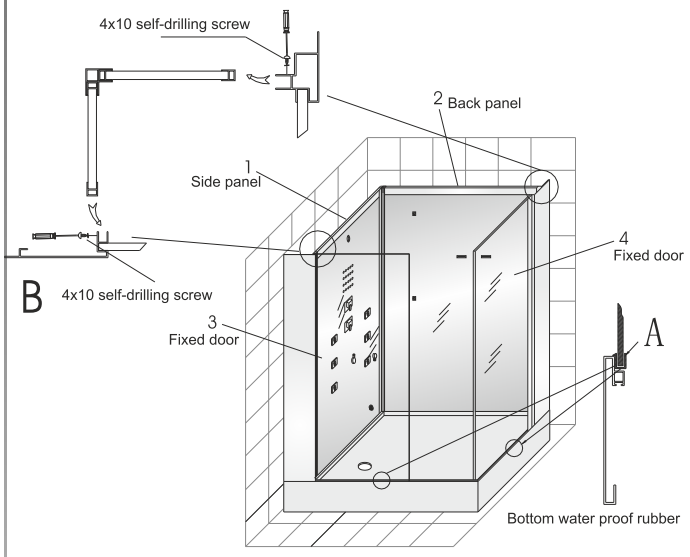

Schritt 4

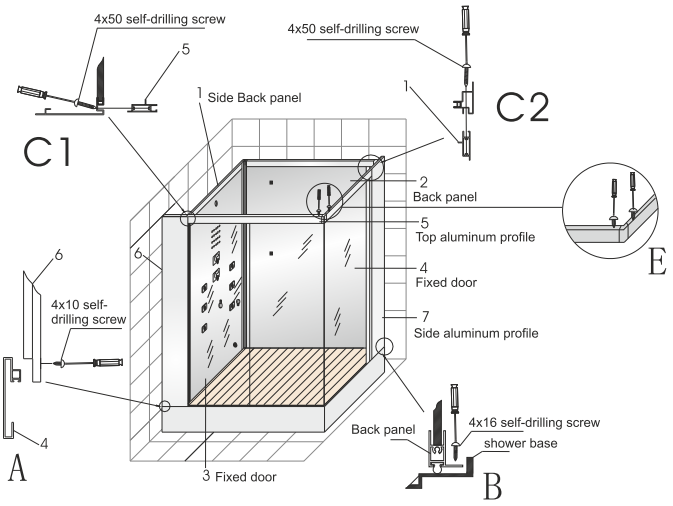

Step 3

Install front fixed glass doors

1. Install the bottom rubber to the bottom of No.3 fixed door, illustrated in the drawing A, then cover the aluminum profile of the No.3 fixed foor to the No.1 side back panel, and use 4x10mm self-locking screws to fix them, illustrated in the drawing B.
2. Install the bottom rubber to the bottom of No.4 fixed door, illustrated in the drawing A, then cover the aluminum profile of the No.4 fixed door to the No.2 back panel, and use 4x10mm self-locking screws to fix them, illustrated in the drawing B.

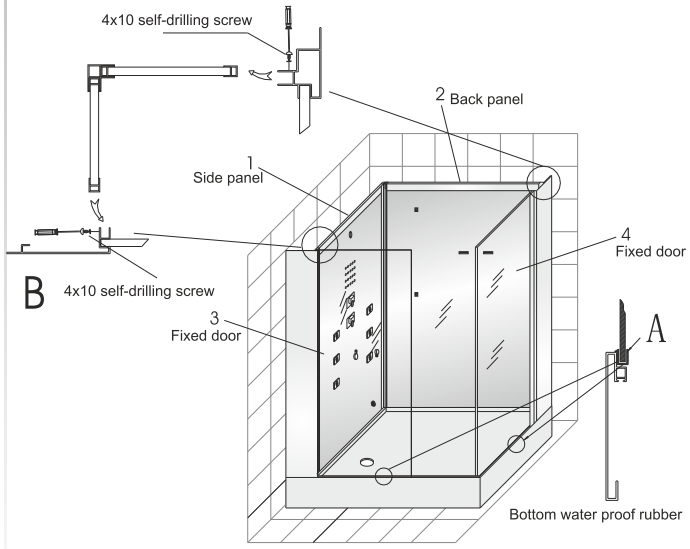

Step 4

Fix back panels and fixed doors

1. Put the two pieces of No.5 top aluminum profile on the top of No.3 fixed door and No.4 fixed door use phillip screwdriver to fix the 2pcs aluminum profiles together with 4x10mm self-locking screws, illustrated in the drawing E and then use a phillip screwdriver to fix the No.5 top aluminum profile to the No.1 side back panel and No.2 back panel with 4x50mm self-locking screws. Illustrated in the drawing C1 and C2.
2. Use a Phillip Screwdriver to fix the No.6 side aluminum profile to base skirt with 4x10mm self-locking screws, illustrated in the drawing A.
3. Use a Phillip Screwdriver to fix the No.2 back panel to the shower base with 4x16mm self-locking screws. Illustrated in the drawing B.

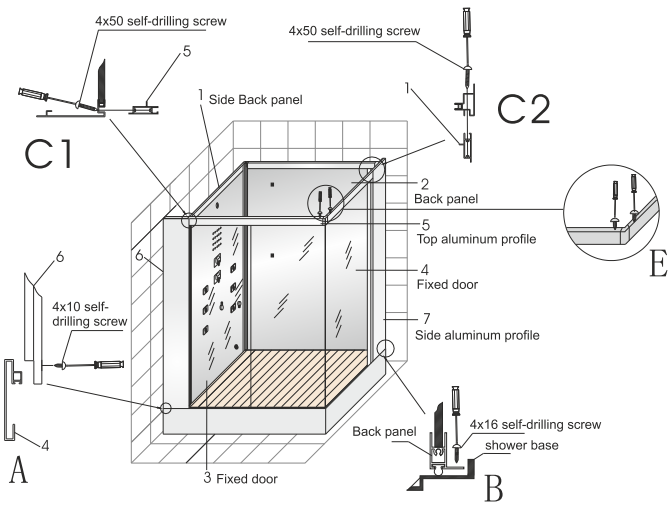

Schritt 5

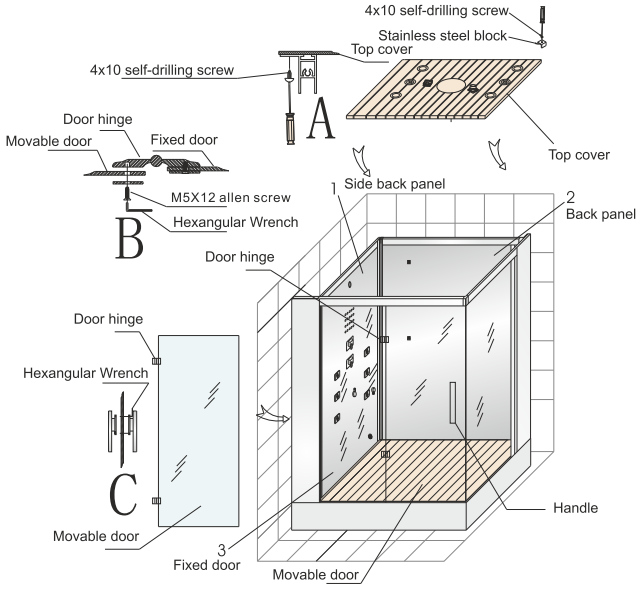

Schritt 6

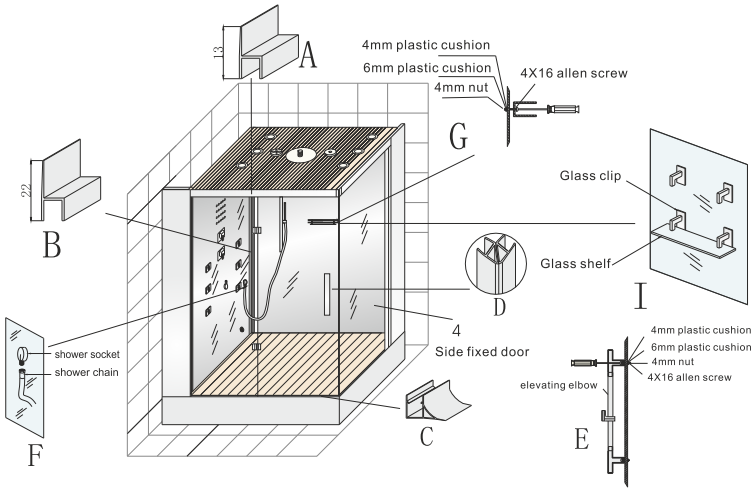

Step 5

Install Movable Door

1. Put the Top Cover on the top of the back panels and fixed doors, then use a Phillip Screwdriver to fix the Top Cover to the No.1 and No.2 back panels with 4x10mm self-locking screws and stainless steel block. Illustrated in the drawing A.
2. Use the Hexangular Wrench to fix the Movable Door to the No.3 fixed door with stainless steel hings and M5x12 screws.
   Note: In case the Movable Door is not close well, please use a Hexangular Wrench to adjust the Stainless Steel Hinge, until it can close well. Illustrated in the drawing B.
3. Use the Hexangular Wrench to fix the Handle to the Movable Door. Illustrated in the drawing C.

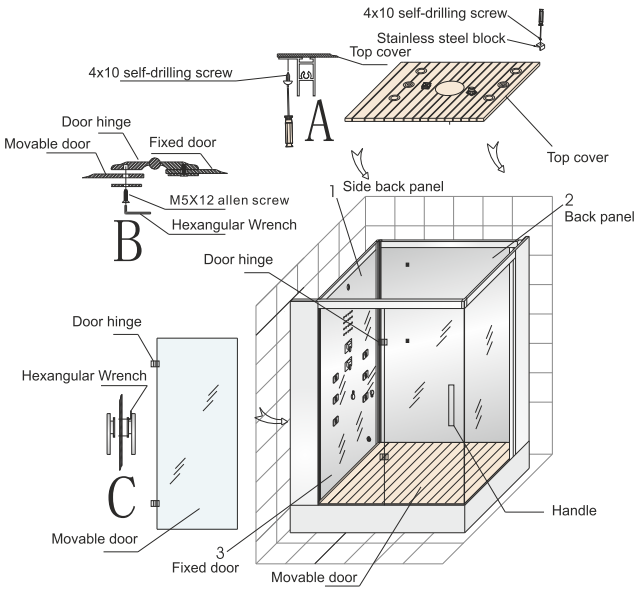

Step 6

Install Accessories

1. Install the water proof rubber(picture A) to the top of the Movable Door.
2. Install the water proof rubber(picture B) to the Movable Door.
3. Install the water proof rubber(picture C) to the bottom of the Movable Door.
4. Install the magnetic strip(picture D) to the Movable Door and No.4 side fixed door.
5. Install the Up and Down Hand Shower Bracket: Use a Phillip Screwdriver to install the Up and Down Hand Shower Bracket to the back panel with 4x16mm screws, 4mm plastic cushion, 6mm plastic cushion and 4mm nuts. Illustrated in the drawing E.
6. Connect the hand shower chain to the hand shower socket. Illustrated in the drawing F.
7. Install the Glass Shelf: Use a Phillip Screwdriver to fix the Glass Clip to the back panel with 4x16mm screws, 4mm plastic cushion, 6mm plastic cushion and 4mm nuts, illustrated in the drawing G. Then put the Glass Shampoo Holder on the track of Glass Clip and use a Phillip Screwdriver to fix them well. Illustrated in the drawing I.

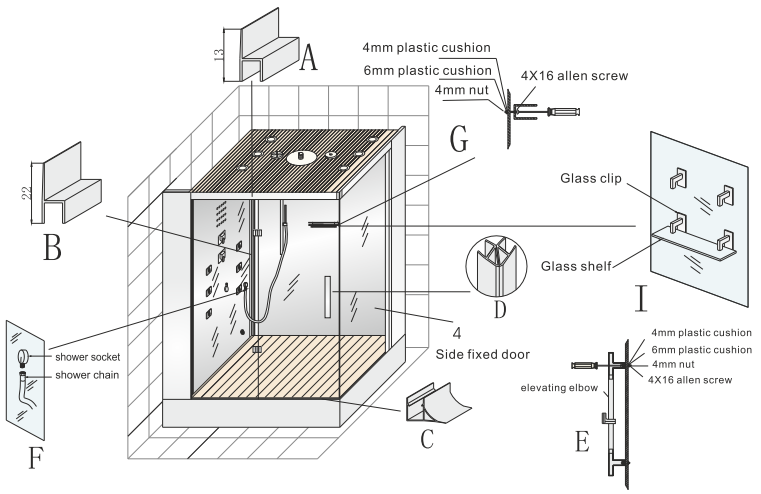

Montage/Installation

Schritt 7

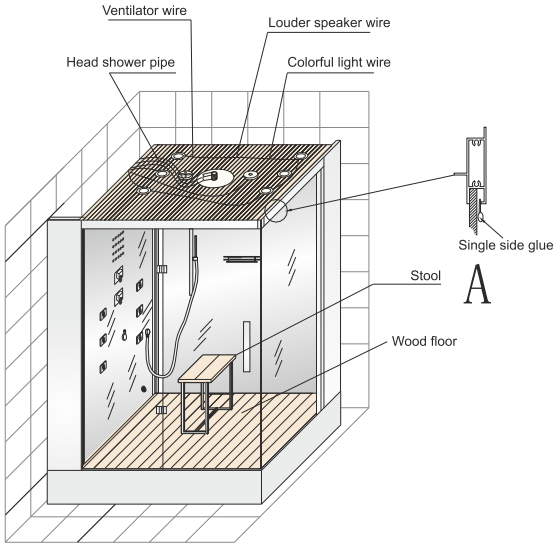

Schritt 8

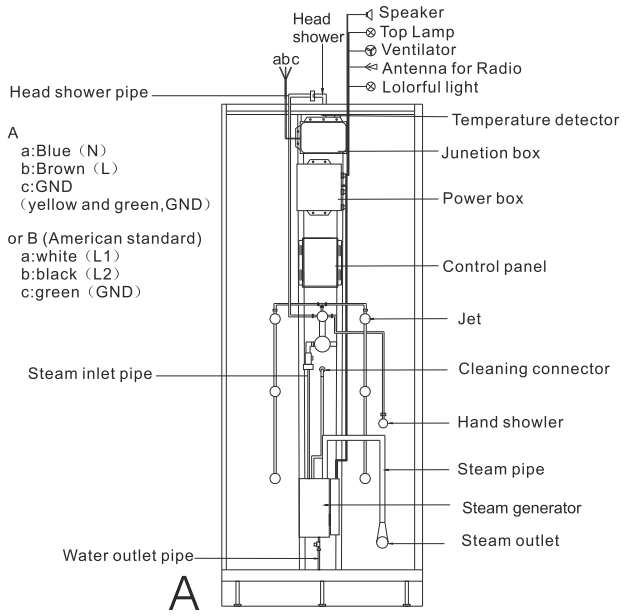

Step 7

Connect Wires
1. Insert the Single Side Rubber to the Top Aluminum Profile, illustrated in the drawing A.
2. Put the wood floor on the shower base carefully, and then put the stool on the wood floor.
3. Find out the Ventilator sign, the Lamp sign, and the Loud Speaker sign which are on the behind of the back panel, then connect the relative wires of these spare parts to the relative sockets. Illustrated in the following drawing.

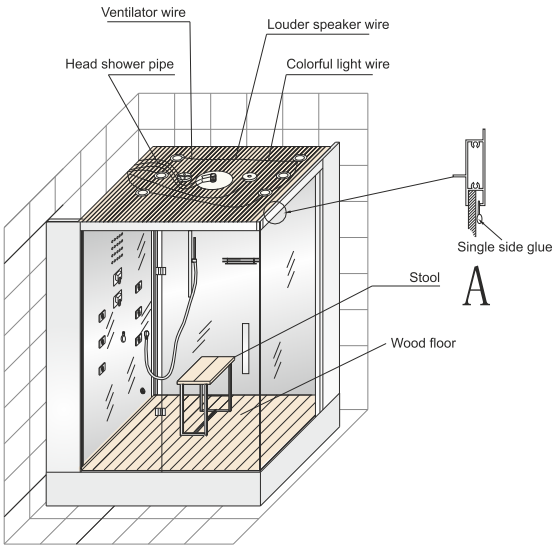

Step 8

Connect Fittings and Water Pipes
1. Connect the head shower pipe to the head shower joint. Connect the water outlet pipe to the shower base and connect the steam pipe to the steam outlet, illustrated in the drawing A.
2. Connect the hot water inlet pipe and cold water inlet pipe separately to the relative joints. Illustrated in drawing A, B and C.
3. **Especially note**: The thermostatic faucet is an optional function, just when customers require to install this spare part and we will do, the standard steam shower is without the thermostatic function. Illustrated in drawing D and E.

Note: Before use the steam shower, please try to test whether all the functions are ok.

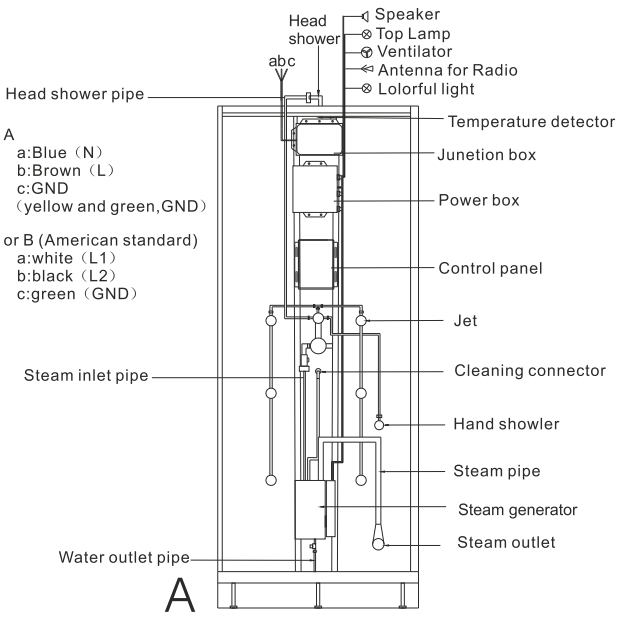

Schritt 9

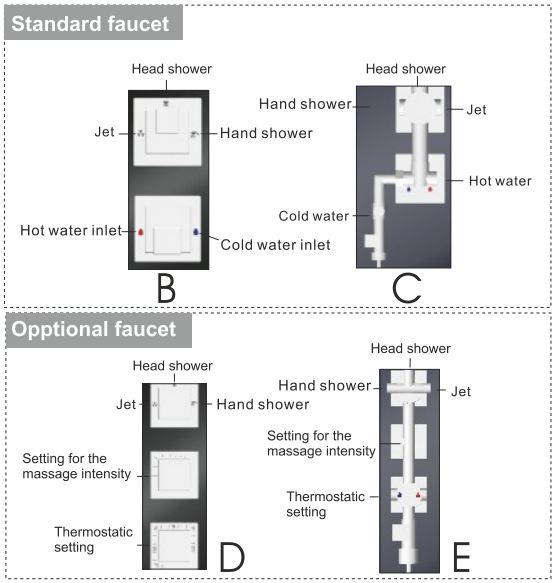

Schritt 1

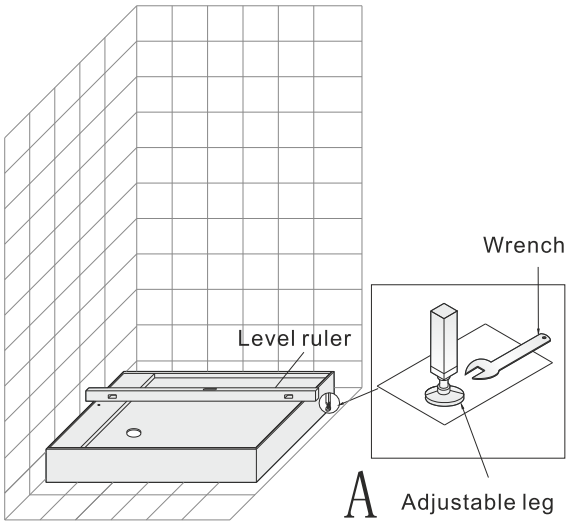

Step 9

Connect Fittings and Water Pipes

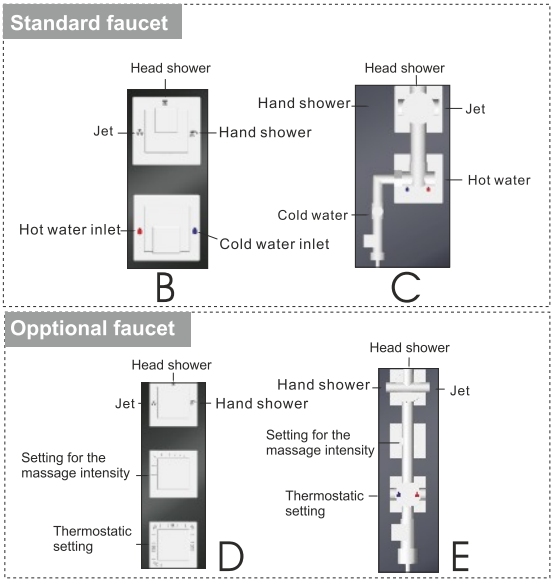

Step 1

Install the shower base
1. Take the shower base out from the carton and put it on the floor carefully.
2. Put the level ruler on the shower base to check whether the shower base is level. If not, please use a Wrench to adjust the adjusting legs to make the shower base become level. Illustrated in the drawing A.

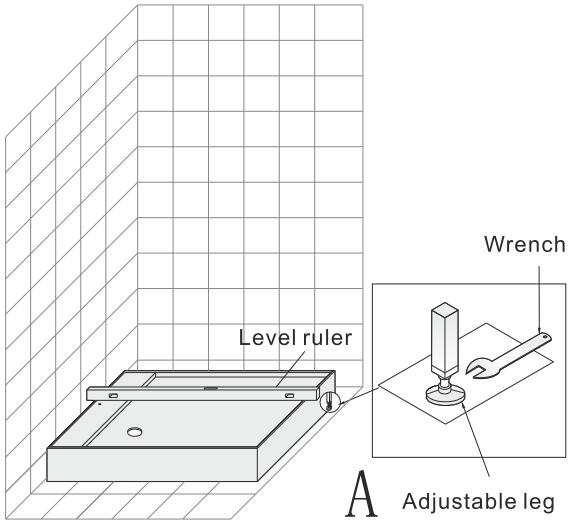

Montage/Installation

Schritt 2

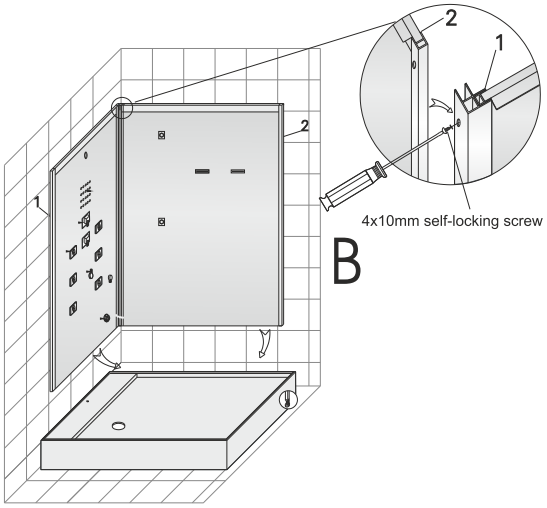

Schritt 3

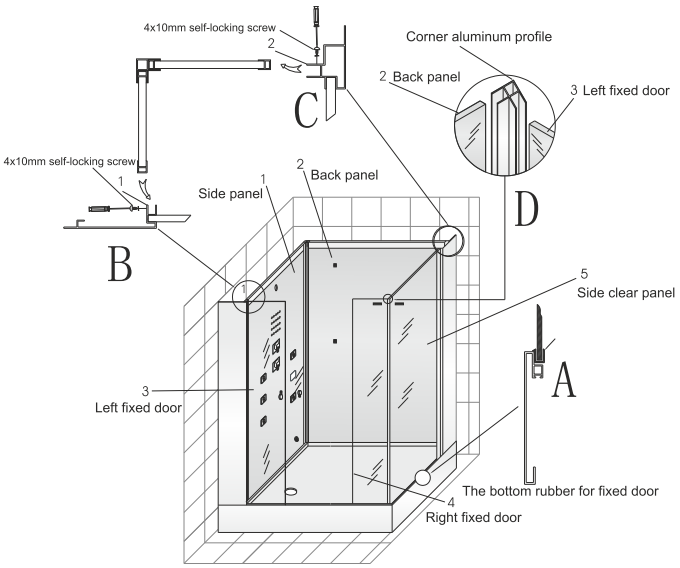

Step 2

Install the back panels

1. Take the No.1 panel out of the carton and put it on the shower base carefully. Please be sure to make one person to stand beside to hold it on safely.
2. Take the No.2 panel out and put it beside of the No.1 panel carefully. Insert the No.2 panel to the aluminum profile of No.1 panel. Then make one person hold on the No.1 and the No.2 panels, the other person uses a Phillip Screwdriver to fix them with 4x10mm self-locking screws. Illustrated in the drawing B.

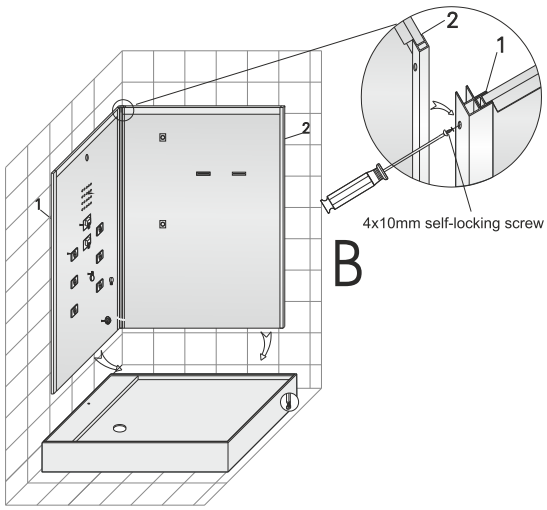

Step 3

Install front fixed glass doors

1. Install the bottom rubber to the No.3 fixed door, Illustrated in the drawing A, then insert the No.3 fixed door to the aluminum profile of No.1 side panel. Use a Phillip Screwdriver to fix them well with 4x10mm self-locking screws. Illustrated in the drawing B.
2. Use the same way to install the No.5 side clear panel, and fix it to the No.2 back panel. Illustrated in the drawing C.
3. Install the bottom rubber to the No.4 fixed door, illustrated in the drawing A, then cover the Corner Water Proof Rubber to the No.5 side clear panel, and insert the No.4 fixed door to the Corner Water Proof Rubber, illustrated in the drawing D.

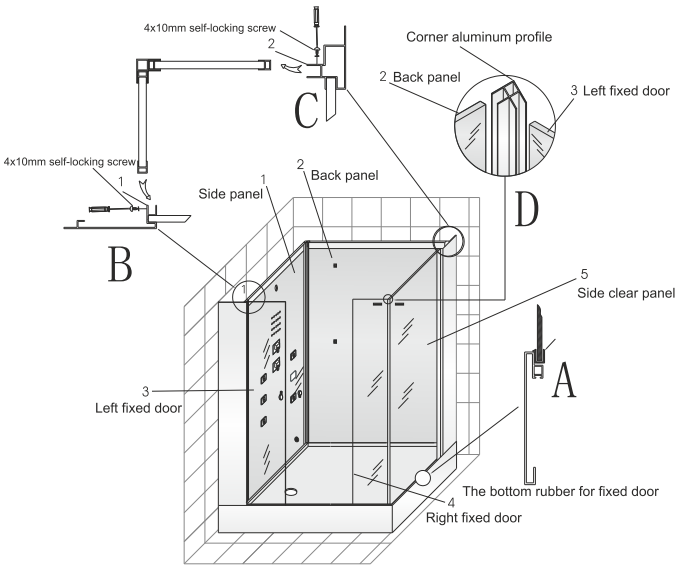

Schritt 4

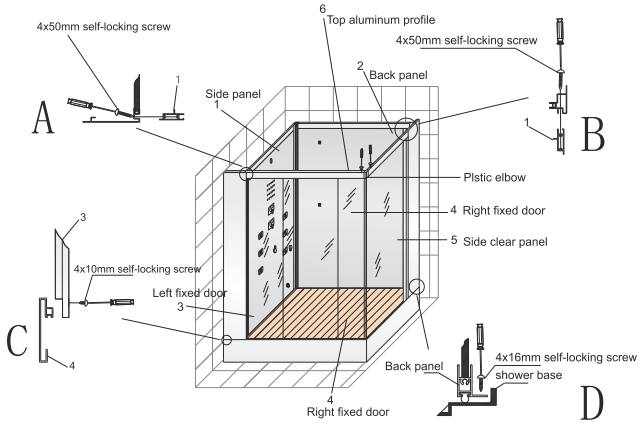

Step 4

Fix all the fixed doors and back panels

1. Cover the 2 pieces Top Aluminum Profiles onto the No.3 and No.4 fixed doors and No.5 side clear panel, and then use a Phillip Screwdriver to fix the 2 pieces Top Aluminum Profiles to the No.1 side panel and No.2 back panel with 4x50mm self-locking screws. Illustrated in the drawing A.
2. Use a Plastic Elbow to join the 2 pieces Top Aluminum Profile together, and then use a Phillip Screwdriver to fix them to the No.4 fixed door and No.5 side clear panel with 4x50mm self-locking screws, illustrated in the drawing B.
3. Use a Phillip Screwdriver to fix the aluminum profile of No.3 fixed door to the skirt of the shower base with 4x10mm self-locking screws. Illustrated in the drawing C.
4. Fix No.1 and No.2 panels to the shower base with 4x16mm self-locking screws, illustrated in the drawing D.

Schritt 5

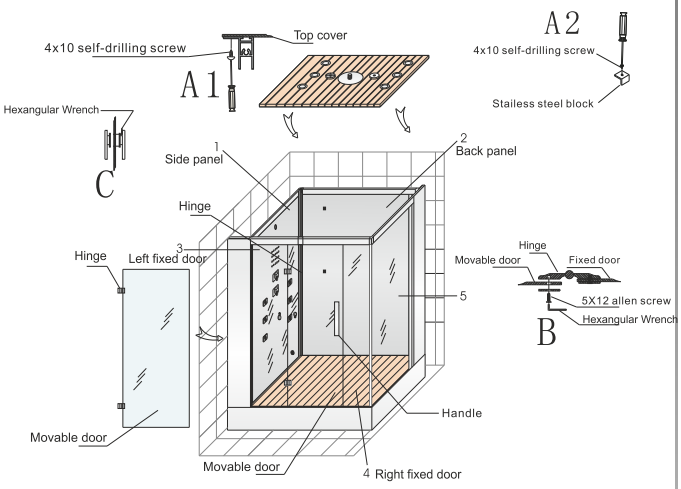

Step 5

Install the Movable Door

1. Put the Top Cover on the shower room, and then use a Phillip Screwdriver to fix the Top Cover to the No.1 and No.2 panels with 4x10mm self-locking screws and Iron Block, illustrated in the drawing A1. Then fix the Top Cover to the No.3 door, No.4 door and No.5 side clear panel with 4x10mm self-locking screws and Iron Block, illustrated in the drawing A2.
2. Put the Movable Door on the shower base, and then make one person to hold it on, the other person use a Hexangular Wrench to install the Movable Door to the No.3 fixed door with hinges and 5x12mm screws. Illustrated in the drawing B.
   Note: In case the Movable Door can't close very well, please use a Hexangular Wrench to adjust the hinge, until the Movable Door become close well. Please adjust the hinge according the drawing B.
3. Use a Hexangular Wrench to install the handle to the Movable Door, illustrated in the drawing C.

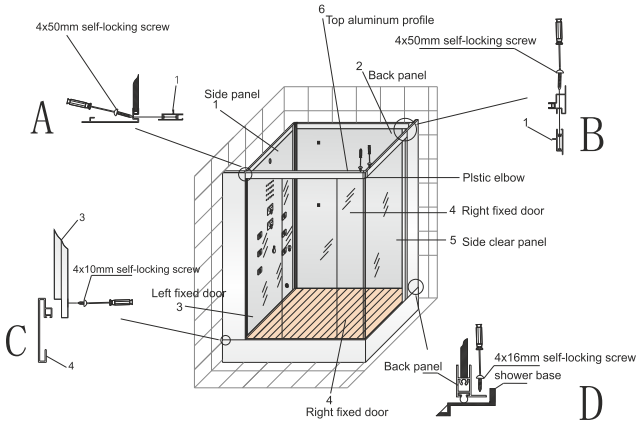

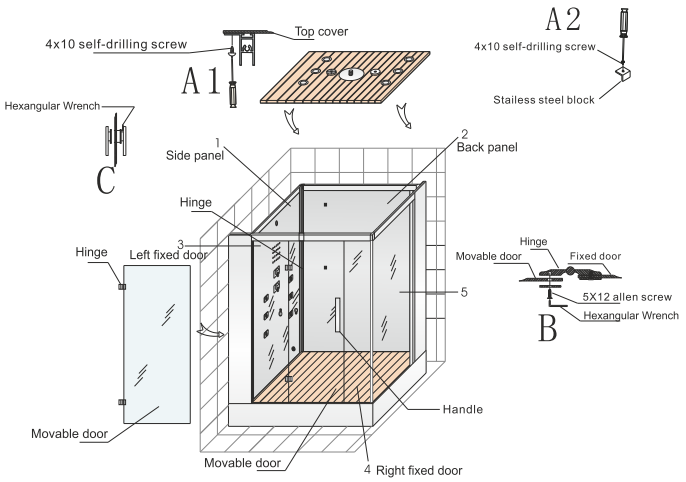

Montage/Installation

Schritt 6

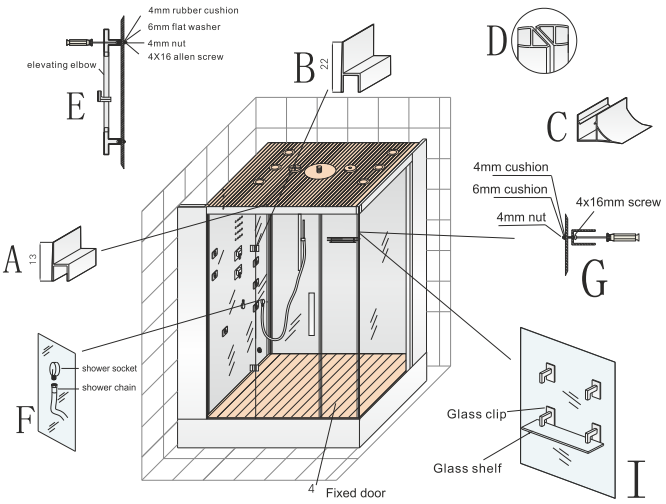

Schritt 7

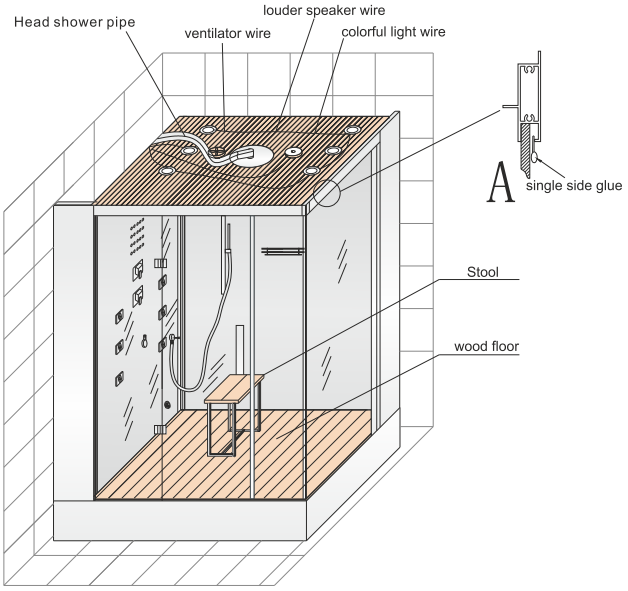

Step 6

Install Accessories

1. Install the top water proof rubber(picture A) to the top of the Movable Door.
2. Install the side water proof rubber(picture B) to the left side of the Movable Door.
3. Install the bottom water proof rubber(picture C) to the bottom of the Movable Door.
4. Install the 2 pieces Magnetic Strips to the right side of the Movable Door and the left side of the No.4 fixed door.
5. Install the Up and Down Hand Shower Bracket: Use a Phillip Screwdriver to install the Up and Down Hand Shower Bracket to the back panel with 4x16mm screws, 4mm plastic cushion, 6mm plastic cushion and 4mm nuts. Illustrated in the drawing E.
6. Connect the hand shower chain to the hand shower socket. Illustrated in the drawing F.
7. Install the Glass Shelf: Use a Phillip Screwdriver to fix the Glass Clip to the back panel with 4x16mm screws, 4mm plastic cushion, 6mm plastic cushion and 4mm nuts, illustrated in the drawing G. Then put the Glass Shampoo Holder on the track of Glass Clip and use a Phillip Screwdriver to fix them well.

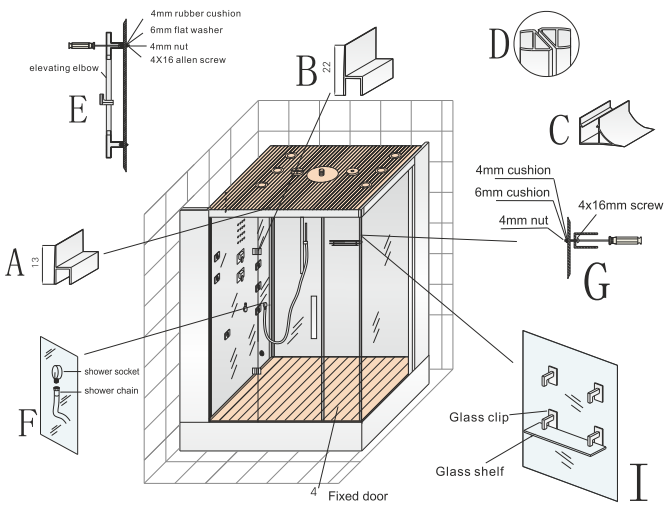

Step 7

Connect Wires

1. Insert the Single Side Rubber to the 2 pieces Top Aluminum Profiles, illustrated in the drawing A.
2. Put the Solid Cherry Wood Floor in the steam shower carefully, and then put the stool on the floor.
3. Find out the Ventilator sign, the Lamp sign, and the Loud Speaker sign which are on the behind of the back panel, then connect the relative wires of these spare parts to the relative sockets. Illustrated in the following drawing.

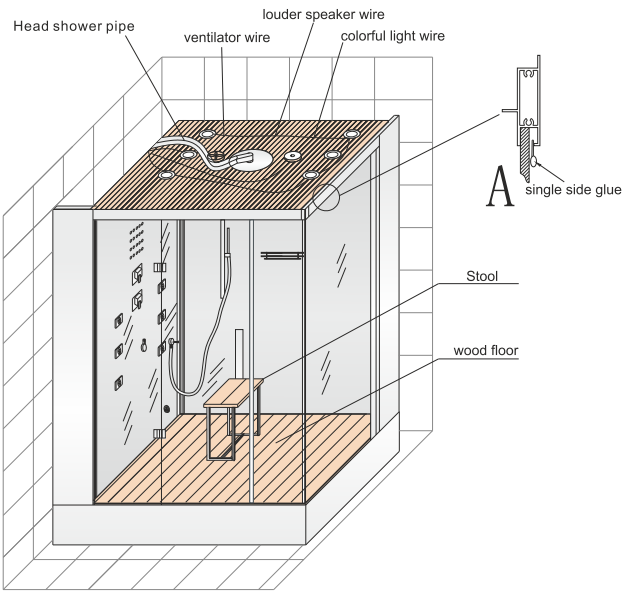

Schritt 8

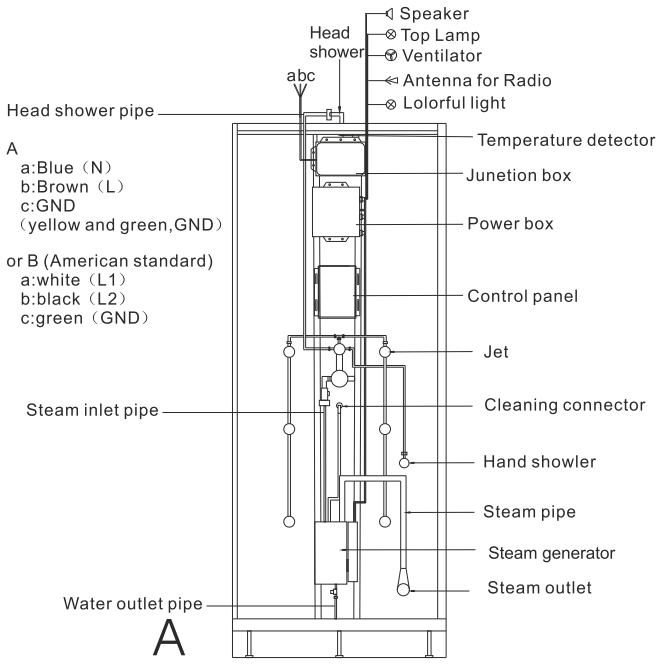

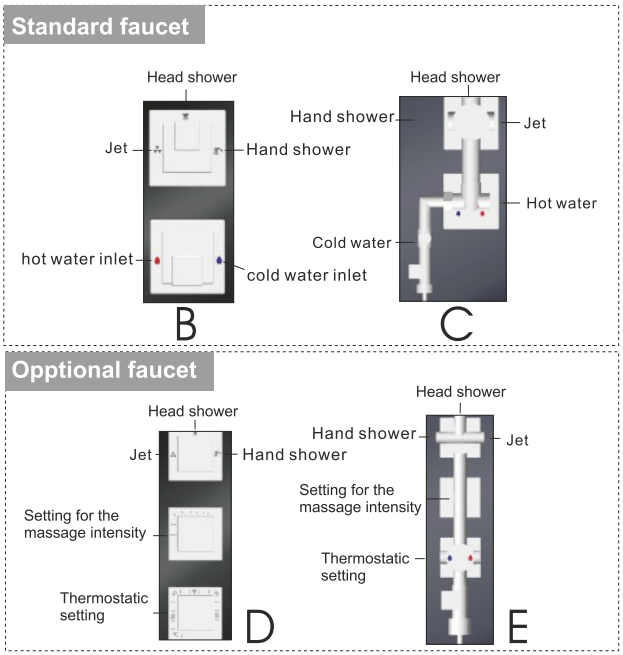

Step 8

Connect Fittings and Water Pipes

1. Connect the head shower pipe to the head shower joint. Connect the water outlet pipe to the shower base and connect the steam pipe to the steam outlet, illustrated in the drawing A.
2. Connect the hot water inlet pipe and the cold water inlet pipe separately to the relative joints. Illustrated in the drawing A, B and C.
3. **Especially note**: The thermostatic faucet is an optional function, just when customers require to install this spare part and we will do, the standard steam shower is without the thermostatic function. Illustrated in the drawing D and E.

Note: Before use the steam shower, please try to test whether all the functions are ok.

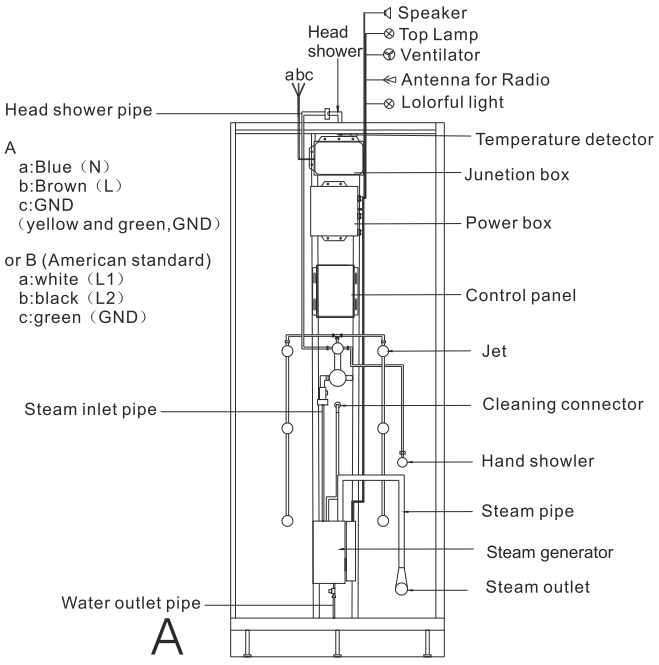

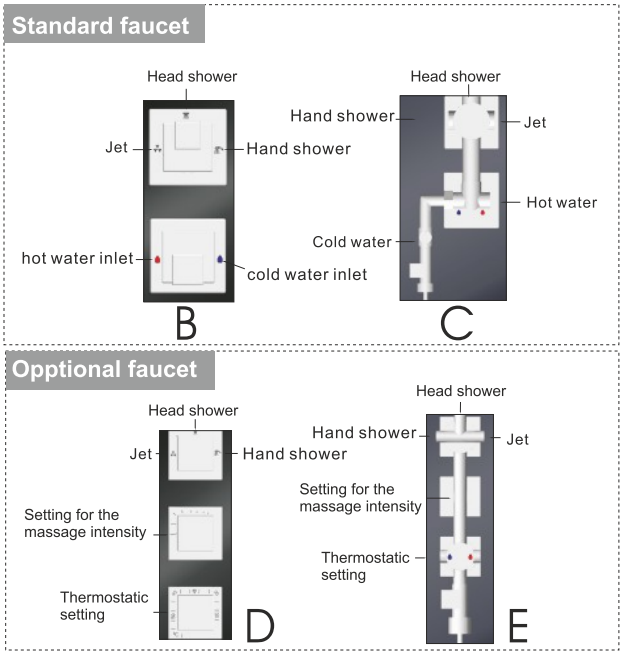

Montage/Installation

Schritt 1

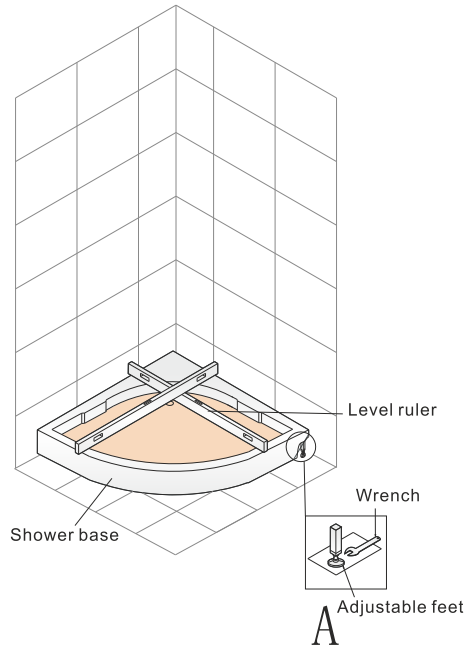

Schritt 2

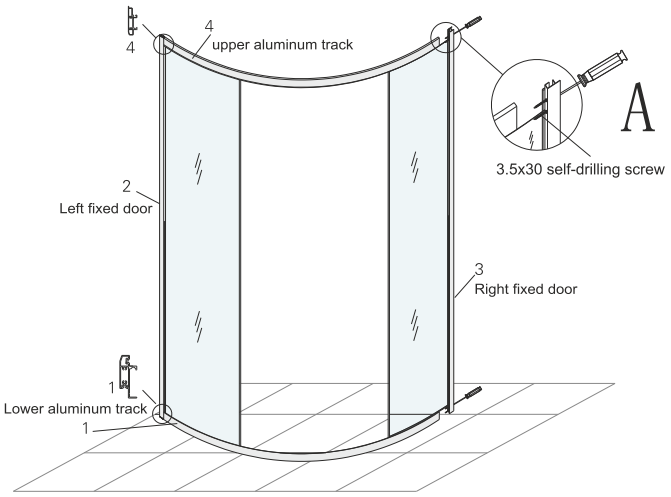

Step 1

Install the shower base

1. Take the shower base out from the carton and put it on the floor carefully.
2. Put the level ruler on the shower base to check whether the shower base is level. If not, please use a Wrench to adjust the adjusting legs to make the shower base become level. Illustrated in the drawing A.

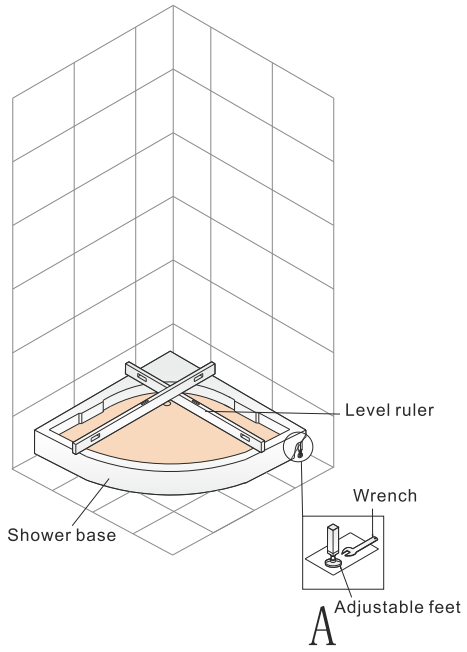

Step 2

Install front fixed glass doors

1. Put the No.1 lower aluminum track on the floor. Side the No.3 right fixed door into the No.1 track, then use a Phillip Screwdriver to fix No.1 aluminum track and No.3 fixed door together with 3.5x30mm self-locking screws. Illustrated in the drawing A.
2. Slide the No.3 right door into the No.4 upper aluminum track, use a Phillip Screwdriver to fix them together with 3.5x30mm self-locking screws as well. Also according the illustration in the drawing A.
3. Use the same way to install the No.2 left fixed door to the No.1 and No.4 aluminum tracks.

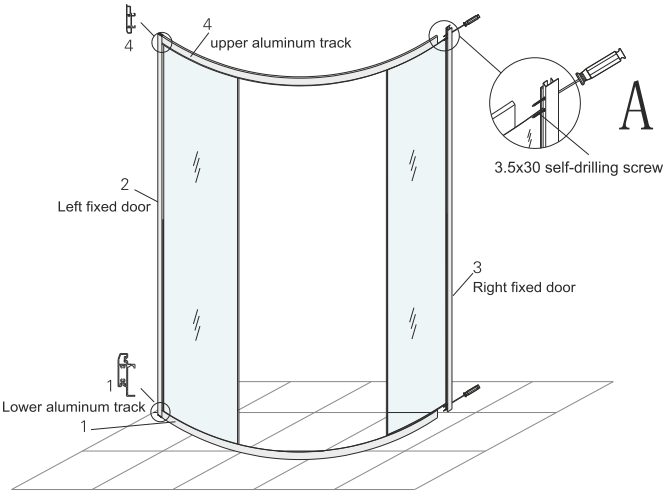

Schritt 3

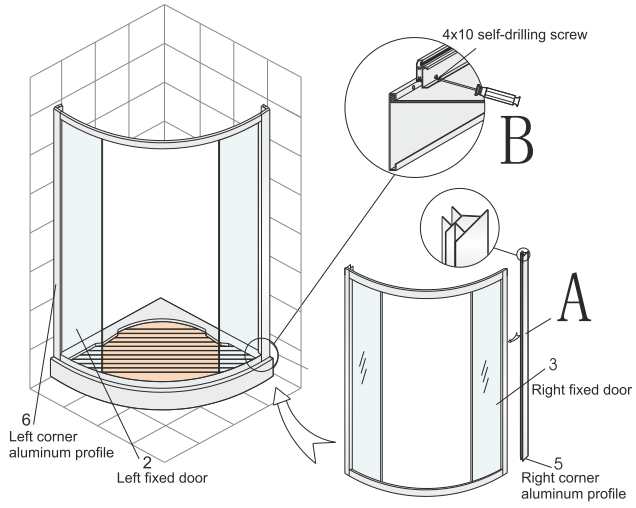

Schritt 4

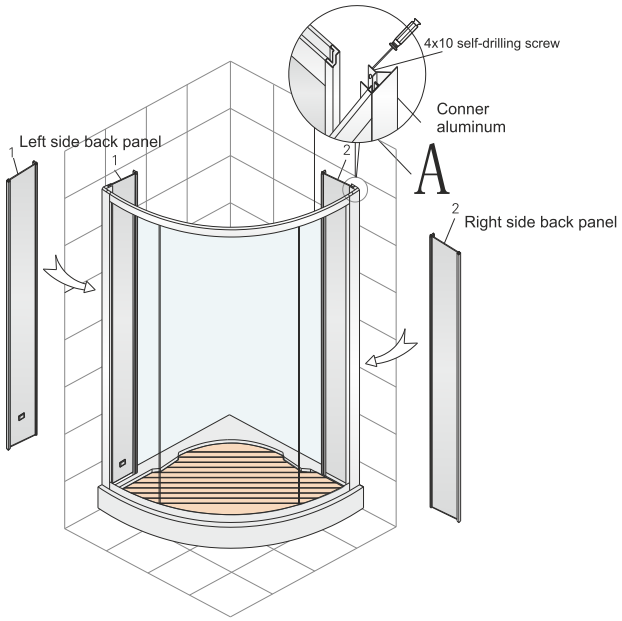

Step 3

Install the Fixed Glass Doors to the Shower Base

1. Cover the No.5 right corner aluminum profile onto the No.3 right installed fixed glass door doorframe(Illustrated in drawing A). Use the same way to cover the No.6 left corner aluminum profile on the No.2 left installed fixed glass doorframe. (**Note**: All the holes in the corner aluminum profile should fit all the holes in the left and the right fixed door very well.)
2. Please ask two persons to carry on the left and the right installed fixed glass doors, and put them on the shower base carefully. Then one person holds on the glass doors, the other person uses a Phillip Screwdriver to fix them to the base with 4x10mm self-locking screws. Illustrated in the drawing B.

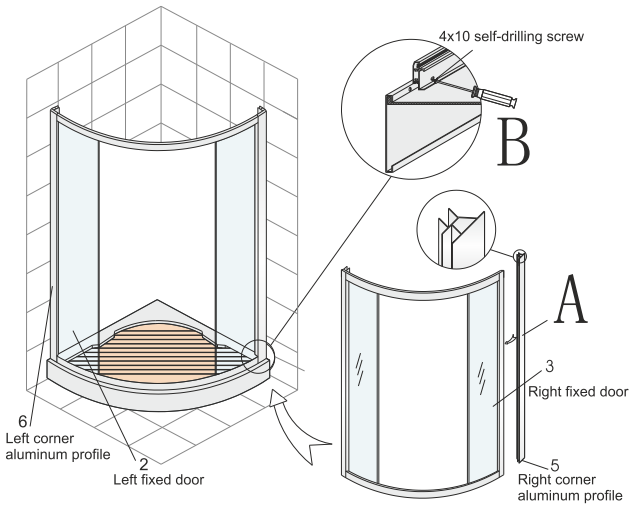

Step 4

Install the left side back panel and the right side back panel

1. Take the No.1 left side back panel out of the carton and carry it through the open door, then put it on the shower base carefully. Insert the No.1 panel to the Corner Aluminum Profile of the left fixed door. Then use a Phillip Screwdriver to fix them with 4x10mm self-locking screws. Illustrated in the drawing A.
2. Use the same way to fix No.2 panel to the right fixed door.

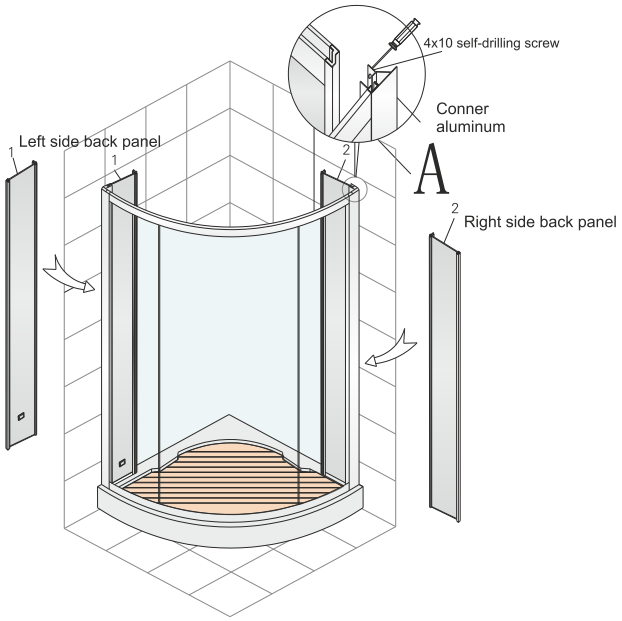

Schritt 5

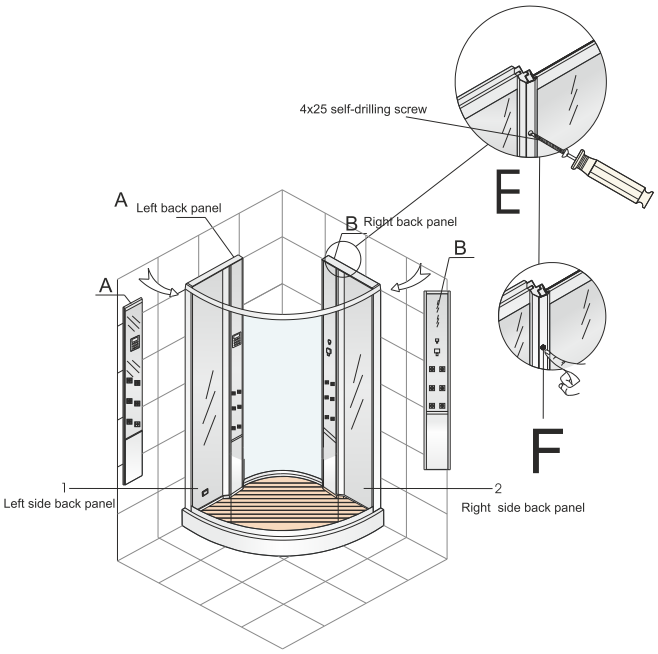

Schritt 6

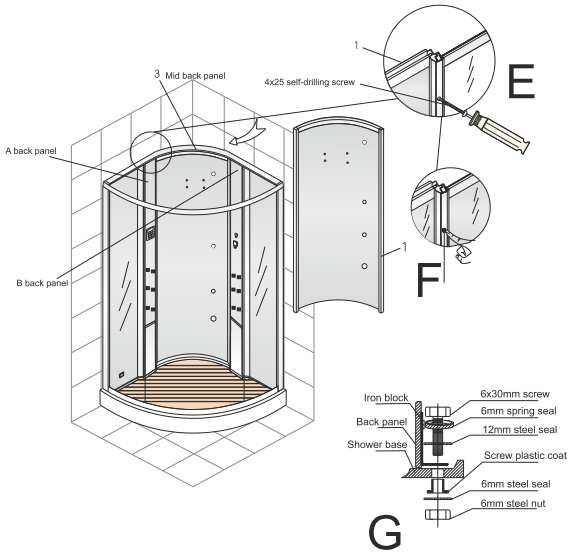

Step 5

Install the left back panel and the right back panel

1. Carry the B right back panel through the open door and put it on the shower base carefully, then use a Phillip Screwdriver to fix B panel to No.2 panel with 4x25mm self-locking screws. Illustrated in the drawing E.
2. Cover the small covers to the small holes. Please kindly note when users want to amend spare parts behind of the mid back panel, just need to take the cover off and unscrew the screws in the small holes and then users can take the mid panel off very easily, no need to move the whole steam shower out. Illustrated in the drawing F.
3. Use the same way to install the A back panel to the No.1 panel.

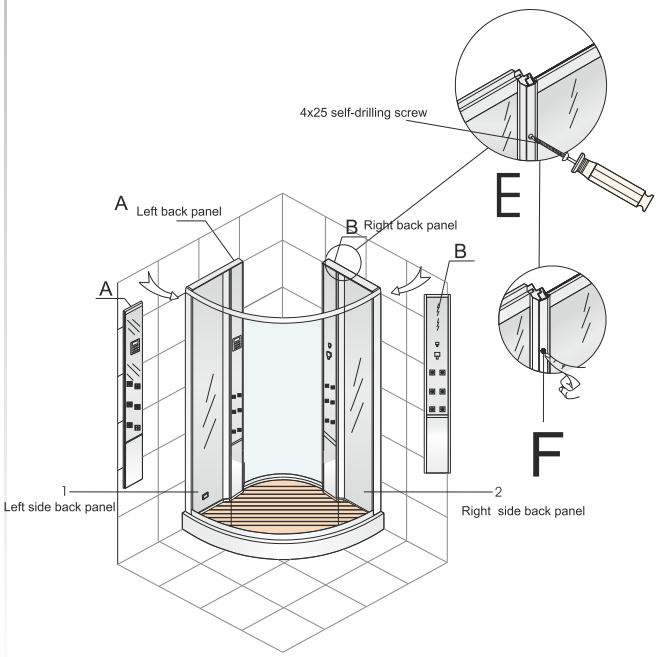

Step 6

Install the mid panel

1. Carry the No.3 mid panel through the open door and put it on the base carefully, then use 4x25mm self-locking screws to fix it to A panel and B panel. Illustrated in the drawing E.
   Cover the small covers to those small holes. Illustrated in the drawing F.
2. Then use a Phillip Screwdriver to fix the back panels to the base with 6x30mm screw, 6mm cushion, the Aluminum Block and so on. Illustrated in the drawing G.

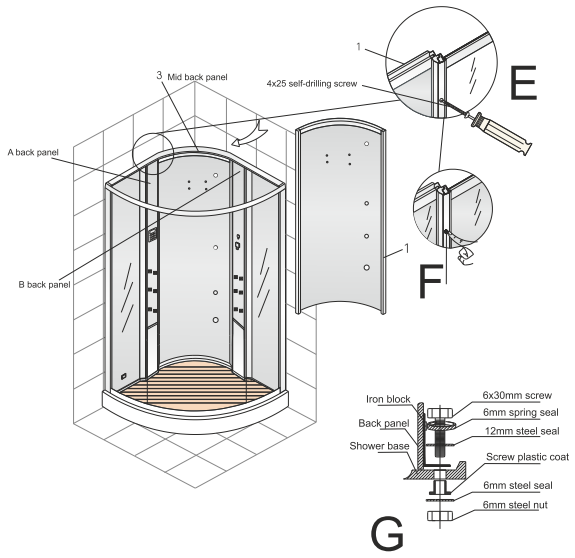

Schritt 7

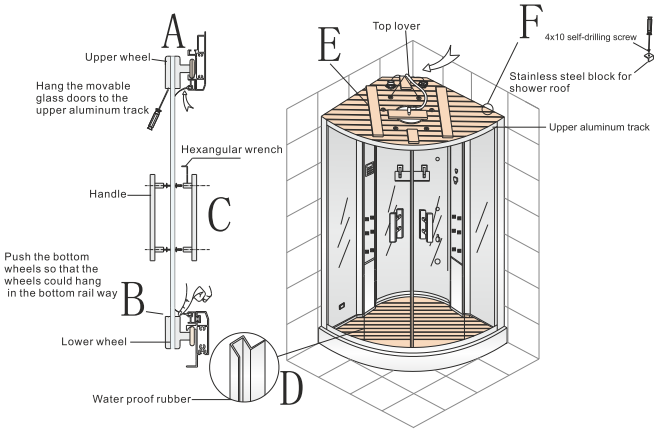

Schritt 8

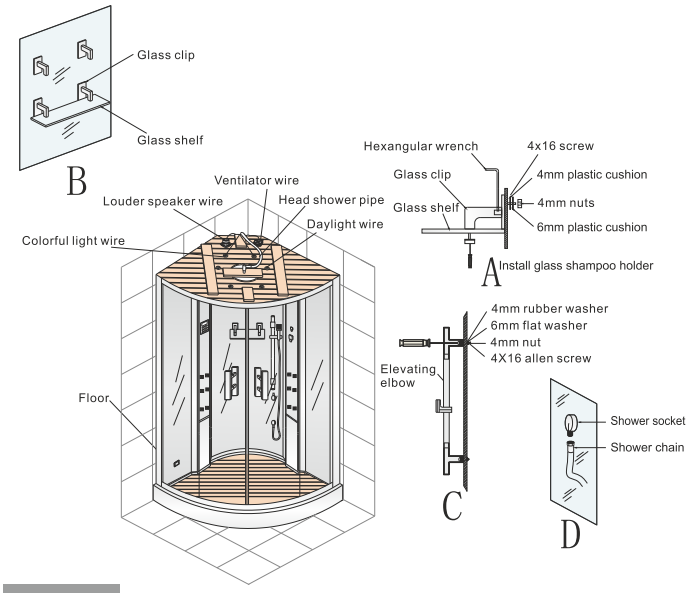

Step 7

Install the Movable Door and the Top Cover

1. Hang up the movable door to the upper aluminum track(Illustrated in the drawing A), and then press the lower wheel to hook it into the lower aluminum track(Illustrated in the drawing B). Note: There is a Spring in the Upper Wheel. If there is a gap between the Movable Door and the Fixed Door, or the Movable Door can not swing very well, please adjust the Upper Wheels.
   Adjust Way: Use a Phillip Screwdriver to adjust the Screw at the bottom of the Upper Wheel, to make the Movable Door vertical.
2. Use a Hexangular Wrench to install the handles. Illustrated in the drawing C.
3. Cover the Water Proof Rubber to the Movable Door. Illustrated in the drawing D.
4. Put the Top Cover on the steam shower carefully, then use 4x10mm self-locking screws and stainless steel block to fix the Top Cover to all the back panels. Illustrated in the drawing E and F.

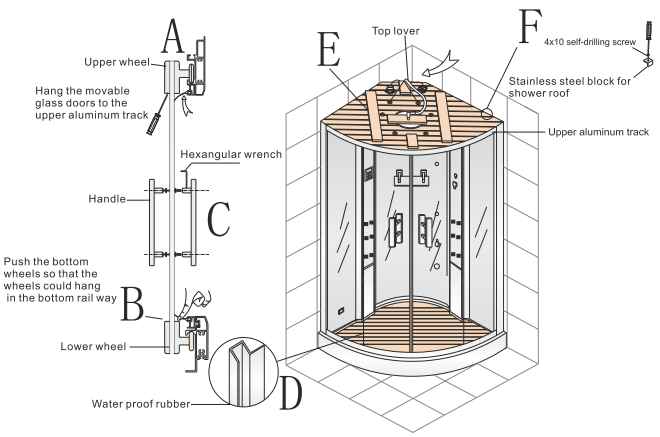

Step 8

Install Accessories and Connect Wires

1. Install the Glass Shelf: Use a Phillip Screwdriver to fix the Glass Clip to the back panel with 4x16mm screws, 4mm plastic cushion, 6mm plastic cushion and 4mm nuts, illustrated in the drawing A. Then put the Glass Shampoo Holder on the track of Glass Clip and use a Phillip Screwdriver to fix them well. Illustrated in the drawing B.
2. Install the Up and Down Hand Shower Bracket: Use a Phillip Screwdriver to install the Up and Down Hand Shower Bracket to the back panel with 4x16mm screws, 4mm plastic cushion, 6mm plastic cushion and 4mm nuts. Illustrated in the drawing C.
3. Connect the hand shower chain to the hand shower socket. Illustrated in the drawing D.
4. Put the solid wood floor into the steam shower carefully.
5. Find out the Ventilator sign, the Lamp sign, and the Louder Speaker sign which are on the behind of the back panel, then connect the relative wires of these spare parts to the relative sockets. Illustrated in the following drawing.

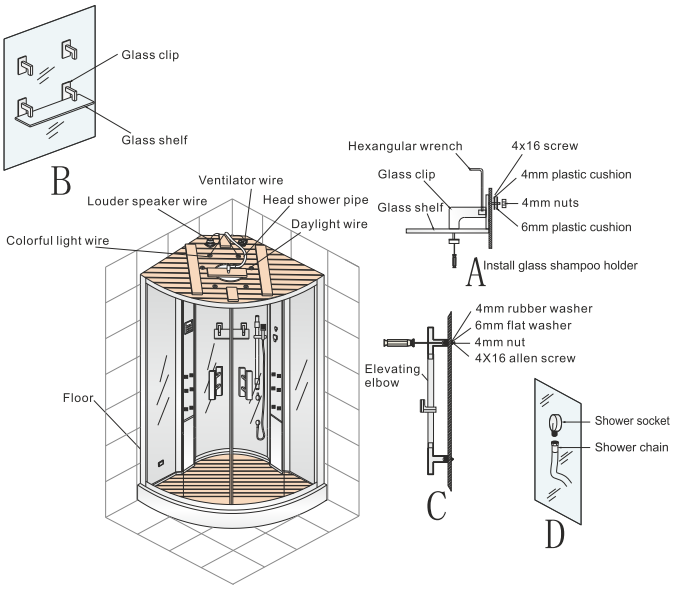

Montage/Installation

Schritt 9

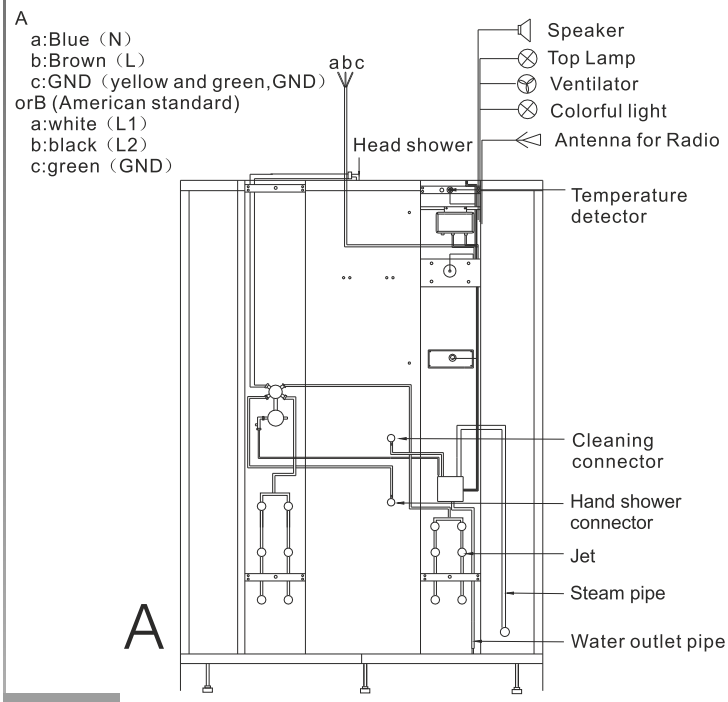

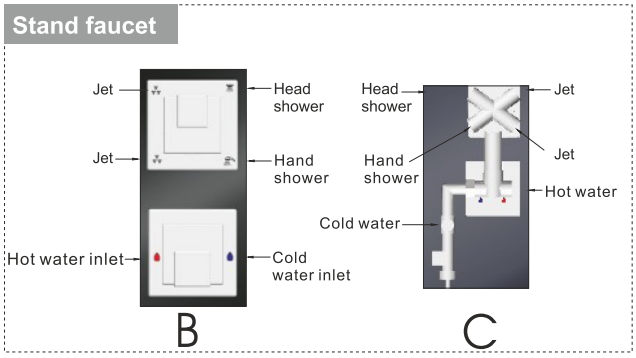

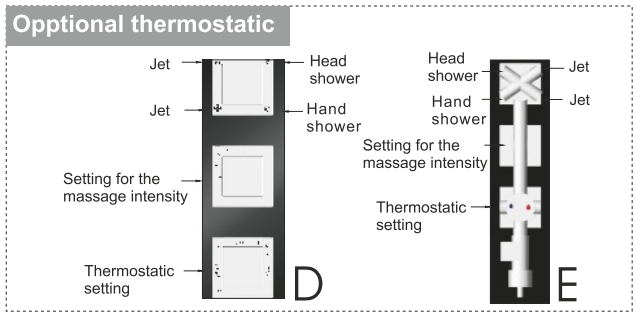

Step 9

Connect Fittings and Water Pipes

1. Connect the head shower pipe to the head shower joint. Connect the water outlet pipe to the shower base and connect the steam pipe to the steam outlet, illustrated in the drawing A.
2. Connect the hot water inlet pipe and cold water inlet pipe separately to the relative joints. Illustrated in drawing A, B and C.
3. Especially note: The thermostatic faucet is an optional function, just when customers require to install this spare and we will do, the standard steam shower is without the thermostatic function. Illustrated in drawing D and E.

Note: Before use the steam shower, please try to test whether all the functions are ok.

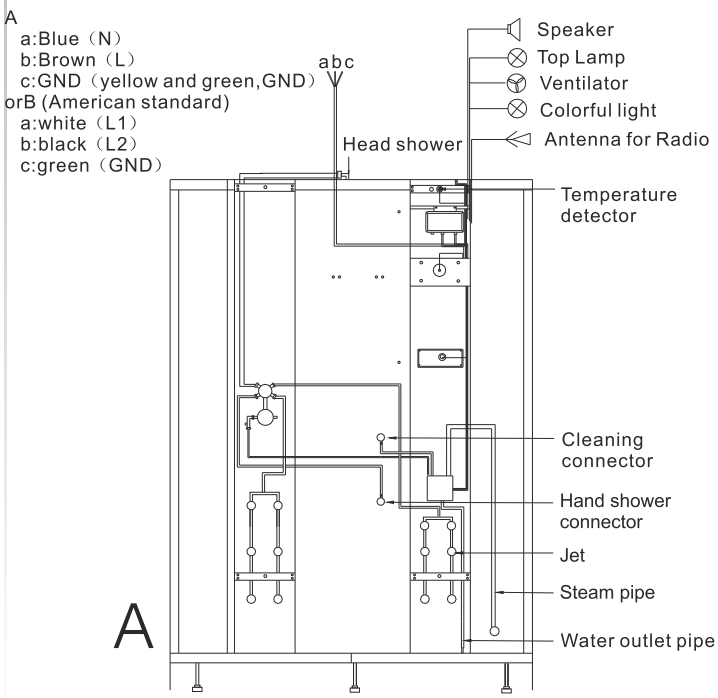

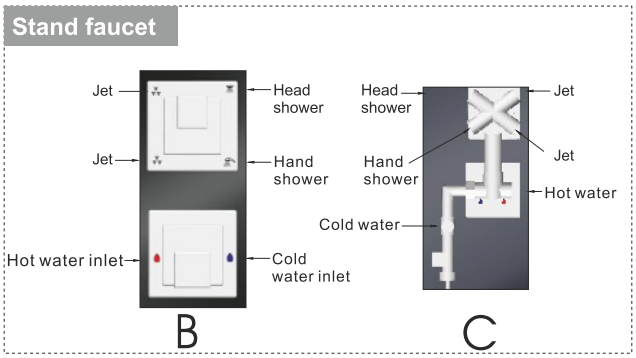

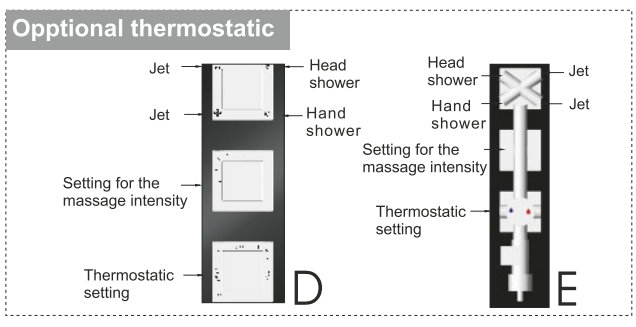

Schritt 1

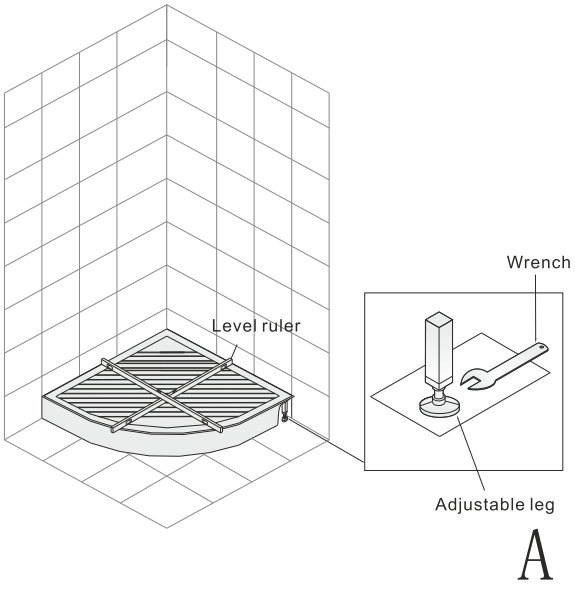

Schritt 2

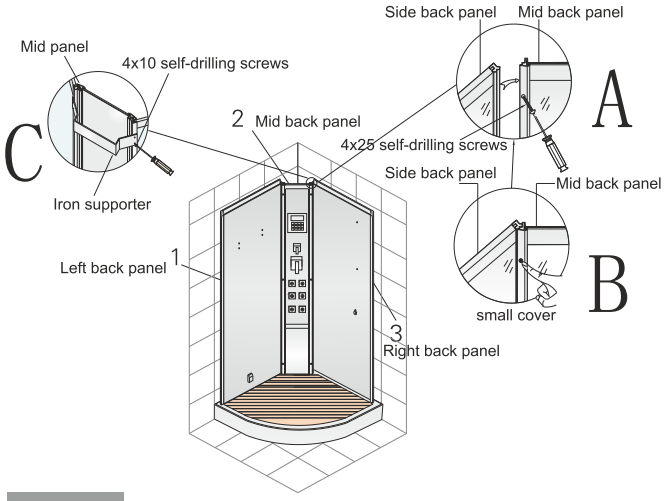

Step 1

Install the shower base

1. Take the shower base out from the carton and put it on the floor carefully. Please check it whether it is level.
2. Put the level ruler on the shower base to check whether the shower base is level. If not, please adjust the adjusting legs to make the shower base become level. Illustrated in the drawing A.

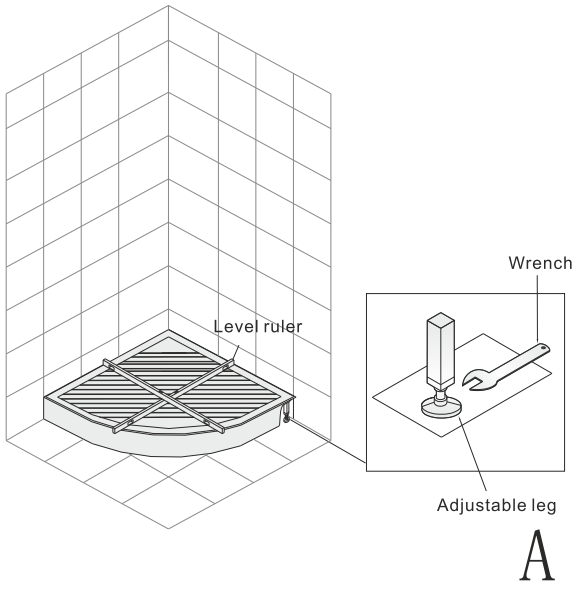

Step 2

Install the back panels

1. Take the No.1 panel out of the carton and put it on the shower base carefully. Please be sure to make one person to stand beside to hold it on safely.
2. Take the No.2 mid panel out and put it beside of the No.1 panel carefully. Insert the No.2 panel to the aluminum profile of No.1 panel. Then make one person hold on the No.1 and the No.2 panels, the other person uses a Phillip Screwdriver to fix them with 4x25mm self-locking screws. Illustrated in drawing A. Then cover the small covers to the holes. Illustrated in drawing B. Note: When users want to amend the spare parts behind of the mid-panel, just need to unscrew the screws in the small holes, then can take the mid-panel off from the base, no need to move the heavy steam shower room out.
3. Use the same way to install the No.3 right side panel and fix it to the No.2 mid-panel. Also illustrated in the drawing A.
4. Fix the Iron Supporter on to the No.1 panel and No.3 pane with 4x10mm self-locking screws. Illustrated in the drawing C.

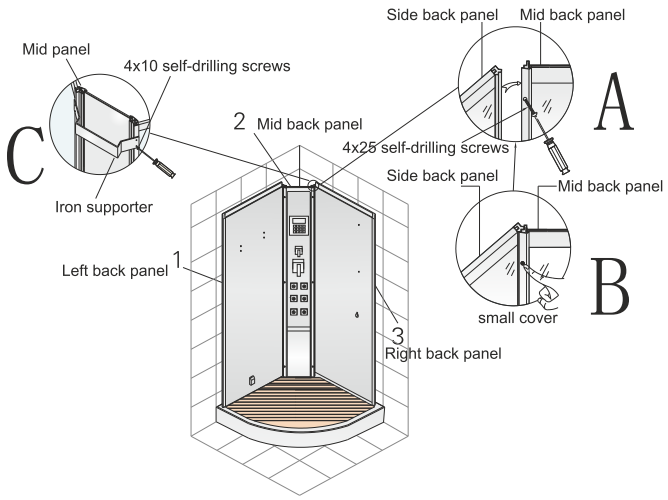

Schritt 3

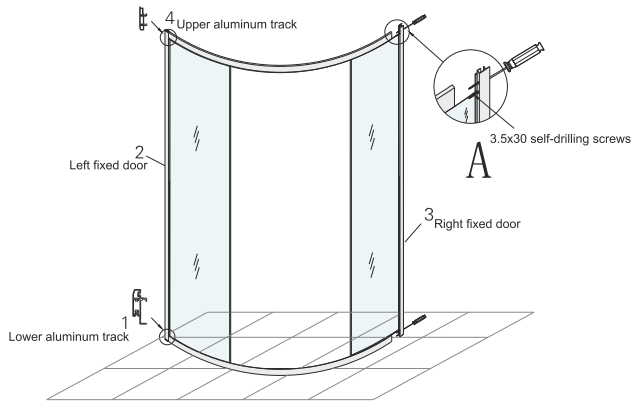

Schritt 4

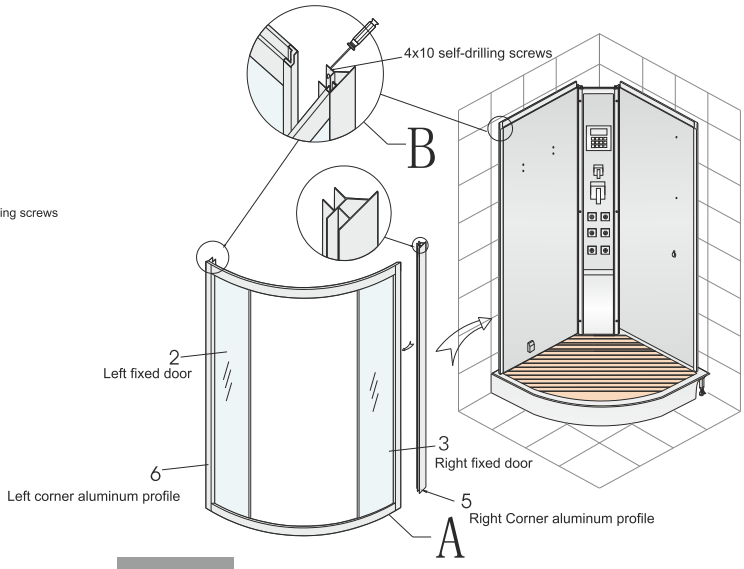

Step 3

Install front fixed glass doors

1. Put the No.1 lower aluminum track on the floor. Slide the No.3 right fixed door into the No.1 track, then use a Phillip Screwdriver to fix No.1 aluminum track and No.3 fixed door together with 3.5x30mm self-locking screws. Illustrated in the drawing A.
2. Slide the No.3 right door into the No.4 upper aluminum track, use a Phillip Screwdriver to fix them together with 3.5x30mm self-locking screws as well. Also according the illustration in the drawing A.
3. Use the same way to install the No.2 left fixed door to the No.1 and No.4 aluminum tracks.

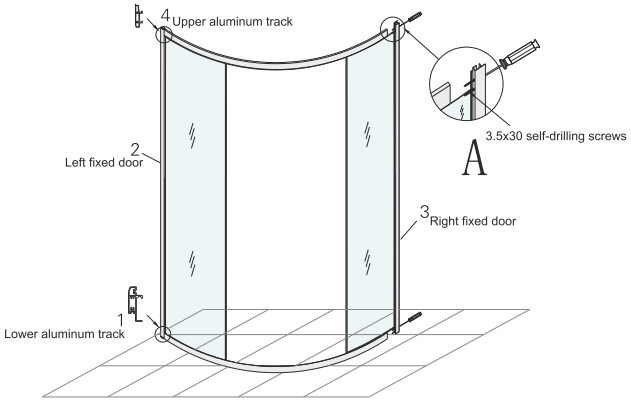

Step 4

Install the Fixed Glass Doors to the Back Panels and the Shower Base

1. Cover the No.5 right corner aluminum profile onto the No.3 right fixed glass doorframe(Illustrated in drawing A). Use the same way to cover the No.6 left corner aluminum profile on the No.2 left fixed glass doorframe.
2. Please ask two persons to carry on the left and the right installed fixed glass doors, and put them on the shower base carefully. Then one person holds on the glass doors, the other person uses a Phillip Screwdriver to fix them to the left and the right back glass panels with 4x10mm self-locking screws. Illustrated in drawing B.

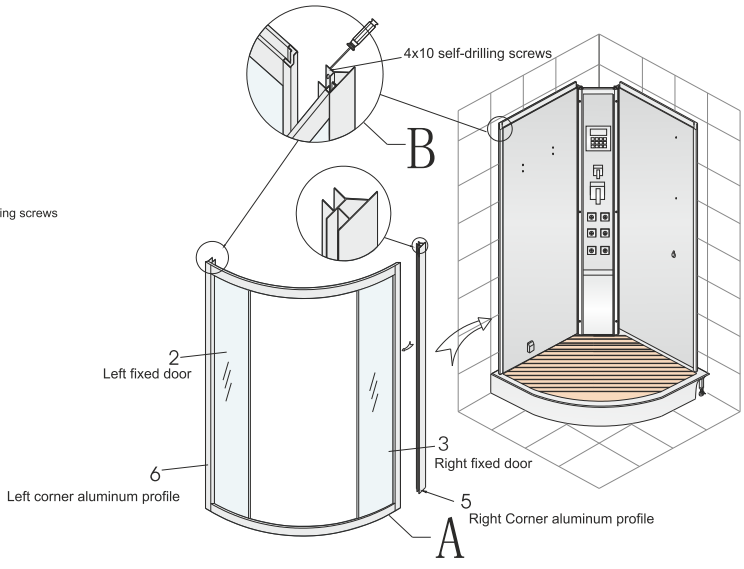

Schritt 5

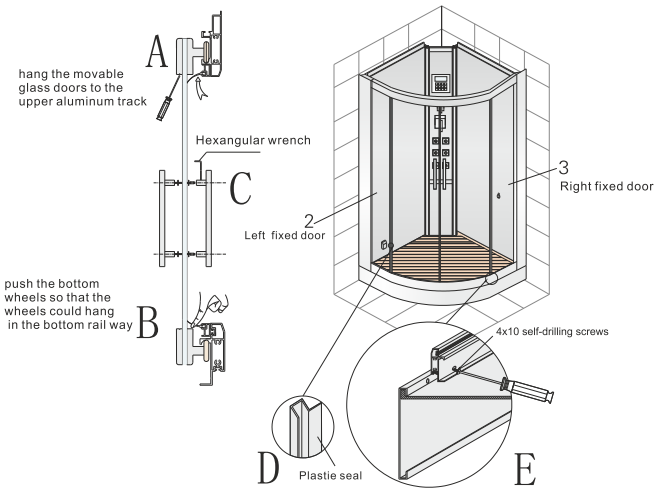

Schritt 6

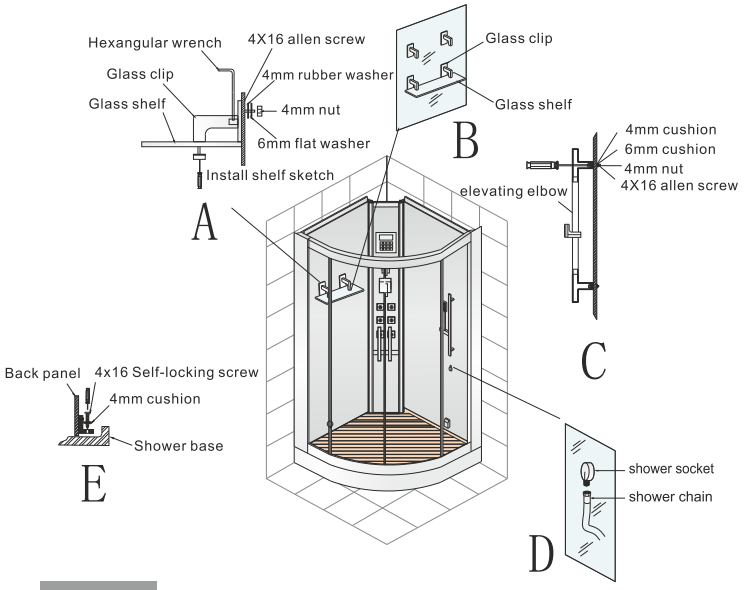

Step 5

Install Movable Door

1. Fix the No.3 right fixed door and the No.2 left fixed door to the shower base with 4x10mm self-locking screws. Illustrated in the drawing E.
2. Insert the two plastic seals to the Movable Door. Illustrated in the drawing D.
3. Install Movable door: Hang up the movable door to the upper aluminum track (Illustrated in the drawing A), and then press the lower wheel to hook it into the lower aluminum track(Illustrated in the drawing B). Note: There is a Spring in the Upper Wheel. If there is a gap between the Movable Door and the Fixed Door, or the Movable Door can not swing very well, please adjust the Upper Wheels. Adjust way: Use a Phillip Screwdriver to adjust the Screw at the bottom of the Upper Wheel, to make the Movable Door vertical.
4. Install the handles with a Hexangular Wrench. Illustrated in the drawing C.

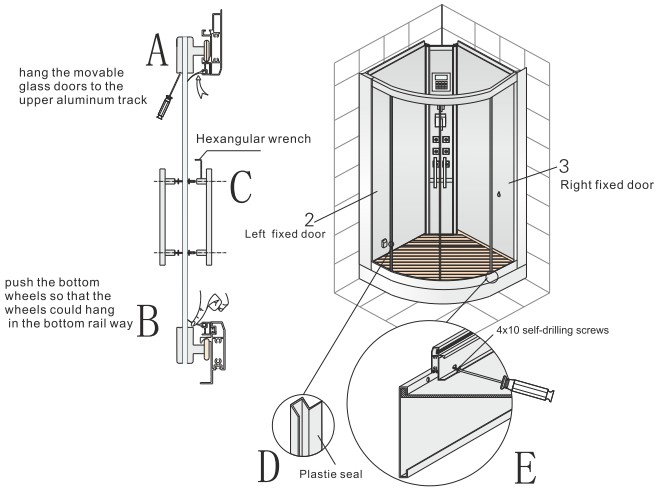

Step 6

Install Accessories

1. Install the Glass Shelf: Use a Phillip Screwdriver to fix the Glass Clip to the back panel with 4x16mm screws, 4mm plastic cushion, 6mm plastic cushion and 4mm nuts, illustrated in the drawing A. Then put the Glass Shampoo Holder on the track of Glass Clip and use a Phillip Screwdriver to fix them well. Illustrated in the drawing B.
2. Install the Up and Down Hand Shower Socket: Use a Phillip Screwdriver to install the Up and Down Hand Shower Socket to the back panel with 4x16mm screws, 4mm plastic cushion, 6mm plastic cushion and 4mm nuts. Illustrated in the drawing C.
3. Connect the hand shower chain to the hand shower socket. Illustrated in the drawing D.
4. Use a Phillip Screwdriver to fix the back panels to the base with 4x16mm self-locking screw, 4mm cushion, and the Aluminum Bloc. Illustrated in the drawing E.

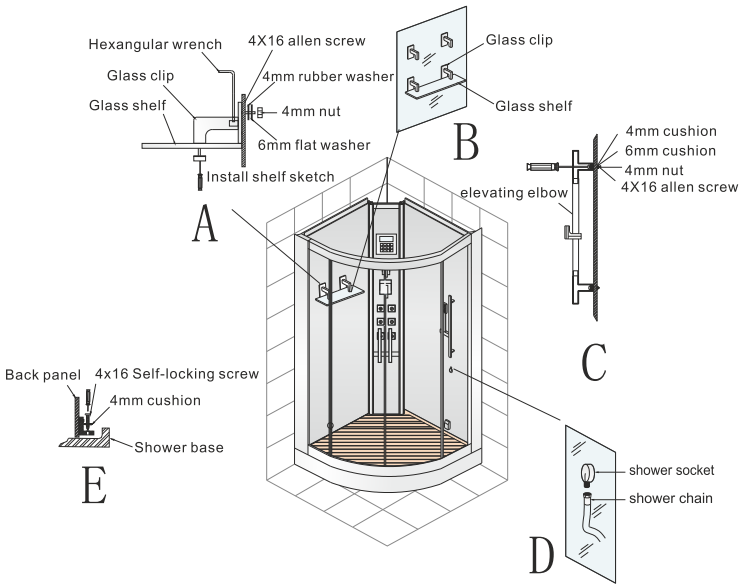

Montage/Installation

Schritt 7

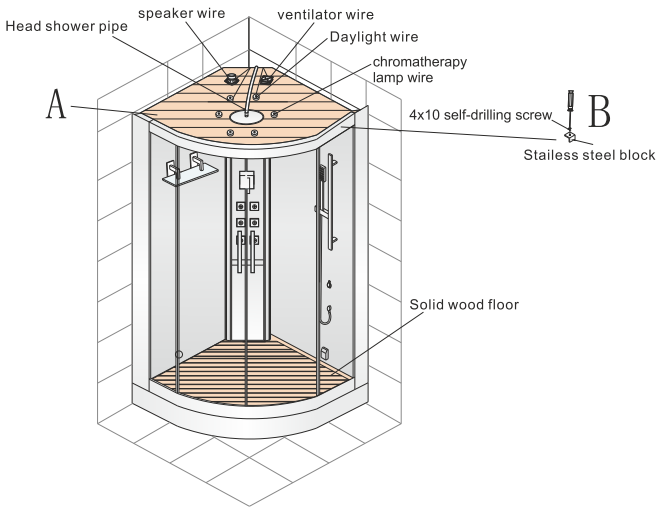

Schritt 8

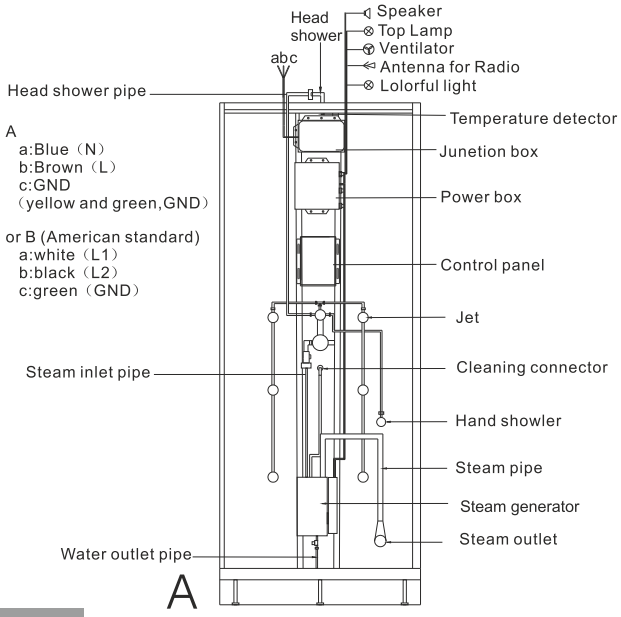

Step 7

Connect Wires
1. Put the top cover onto the steam shower carefully(Illustrated in the drawing A).
2. Use a Phillip Screwdriver to fix the Top Cover to Back Panels with 4x10mm self-locking screws and Stainless Steel Cushion. Illustrated in the drawing B.
3. Put the Solid Cherry Wood Floor in the steam shower carefully, put the stool on the floor.
4. Find out the Ventilator sign, the Lamp sign, and the Louder Speaker sign which are on the behind of the back panel, then connect the relative wires of these spare parts to the relative sockets. Illustrated in the following drawing.

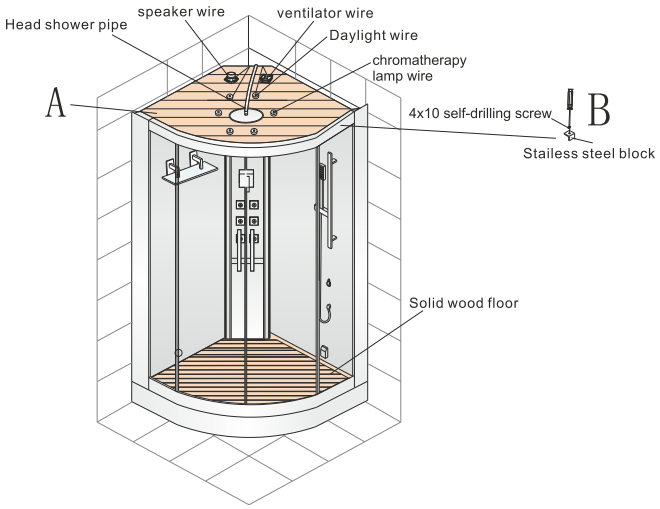

Step 8

Connect Fittings and Water Pipes
1. Connect the head shower pipe to the head shower joint. Connect the water outlet pipe to the shower base and connect the steam pipe to the steam outlet, illustrated in the drawing A.
2. Connect the hot water inlet pipe and the cold water inlet pipe separately to the relative joints. Illustrated in drawing A, B and C.
3. Especially note: The thermostatic faucet is an optional function, just when customers require to install this spare part and we will do, the standard steam shower is without the thermostatic function. Illustrated in drawing D and E.

Note: Before use the steam shower, please try to test whether all the functions are ok.

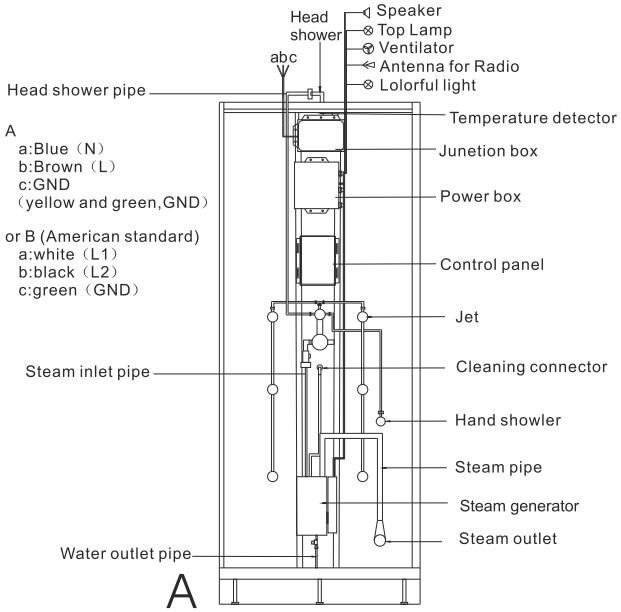

Schritt 9

Standard control value

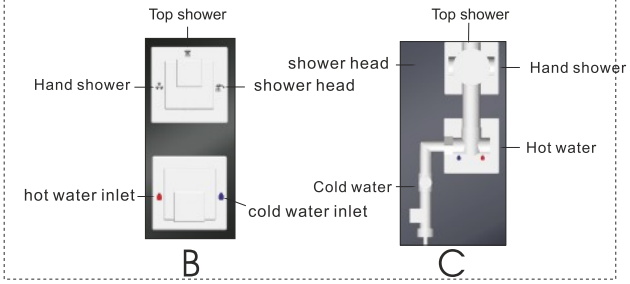

Thermostatic faucet

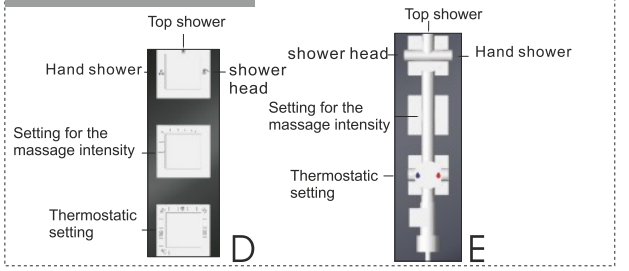

Schritt 1

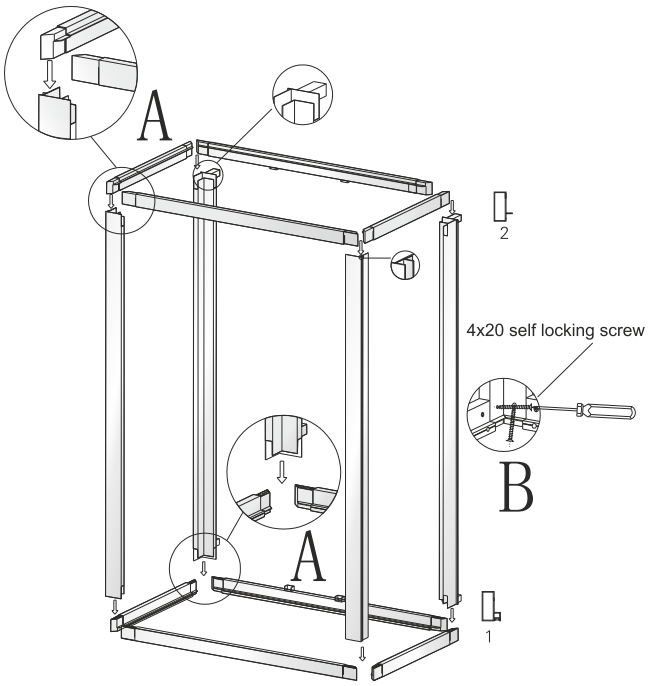

Step 9

Connect Fittings and Water Pipes

Standard control value

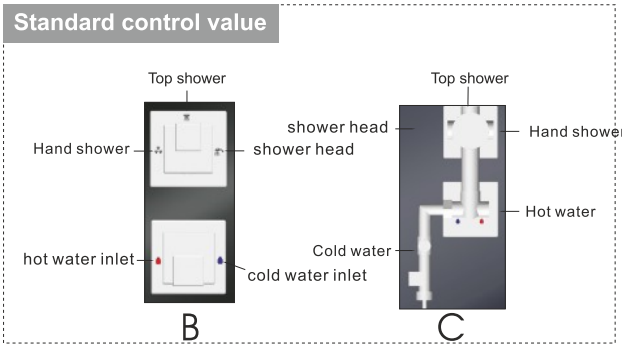

Thermostatic faucet

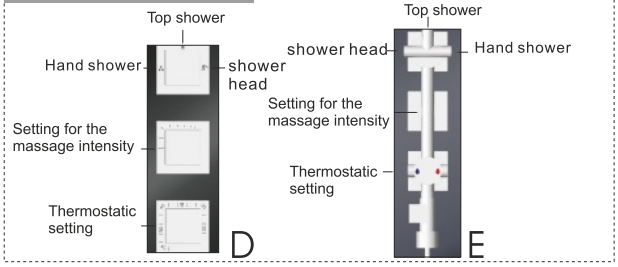

Step 1

Put lower fixed aluminum profile 1 on the ground, then put upright aluminum profile in lower fixed aluminum profile 1 as picture A, with 4x20 self-locking screw as picture B.
Install upper fixed aluminum profile 2 as the same way.

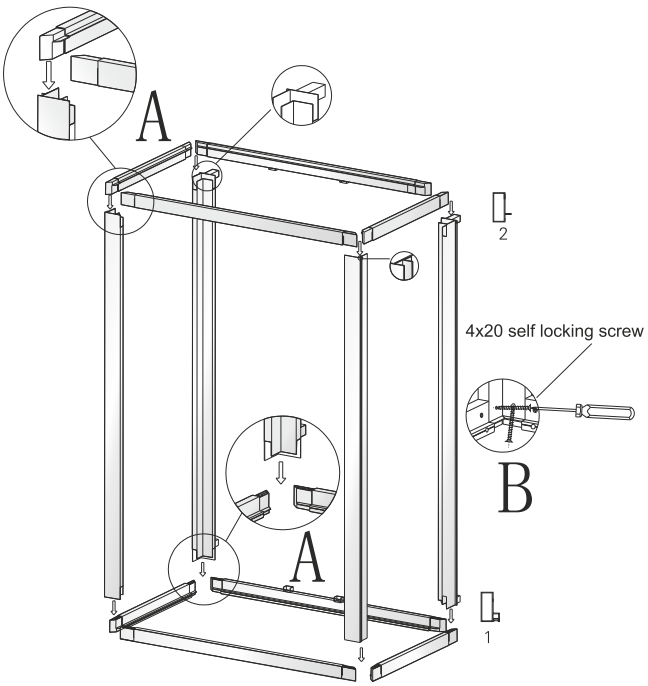

Schritt 2

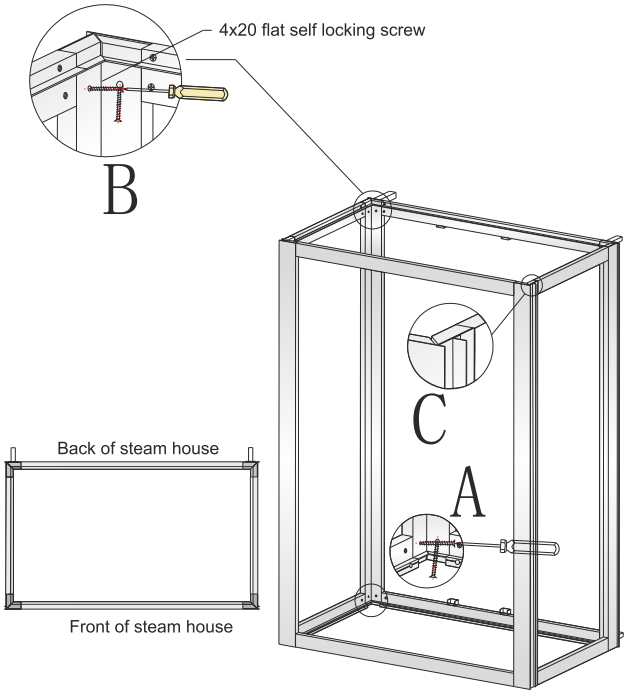

Schritt 3

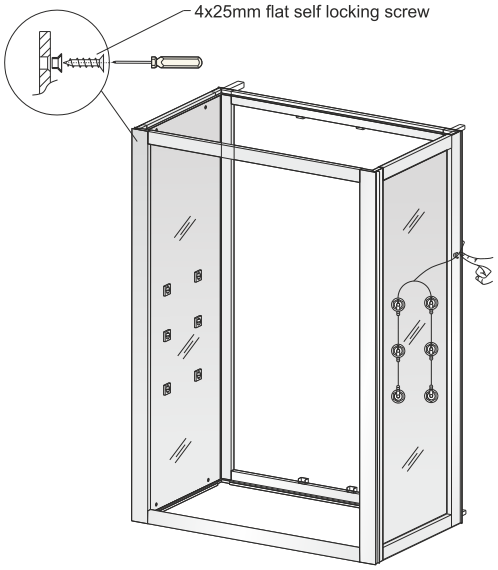

Step 2

Follow picture 2 to screw 8 corners tightly with 4x20 flat self-locking screw as picture A and B. Check and make sure the gap between of aluminum alloy matching surface is less than 0.5 as picture C.

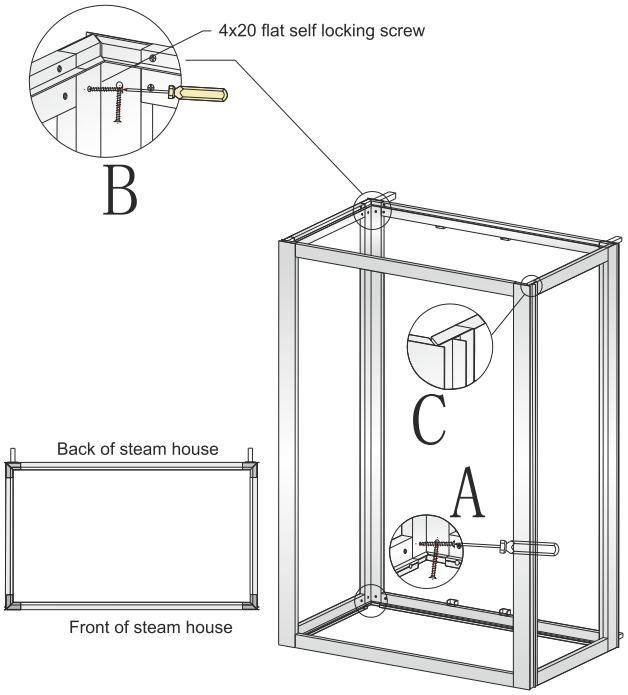

Step 3

Put the side glass panels between side corner profiles. Insert rubber plugs into the hole with 4x25mm flat self-locking screw tightly as picture 3 to fasten the side glass panels. Please use fingers to push water inlet pipe into rubber plugs after installation.

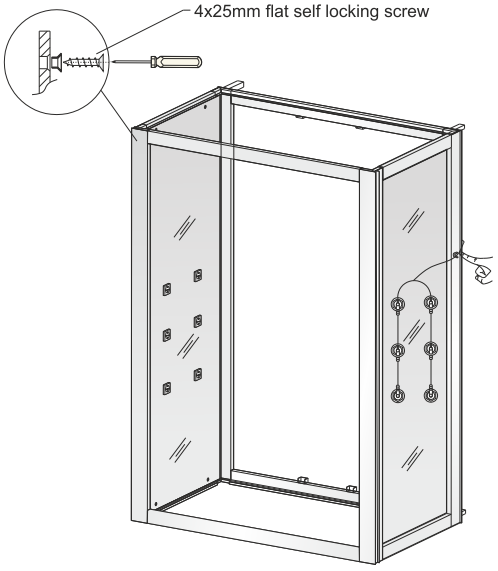

Schritt 4

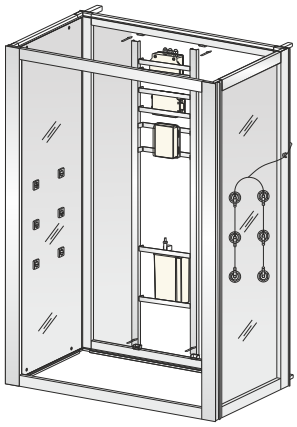

Schritt 5

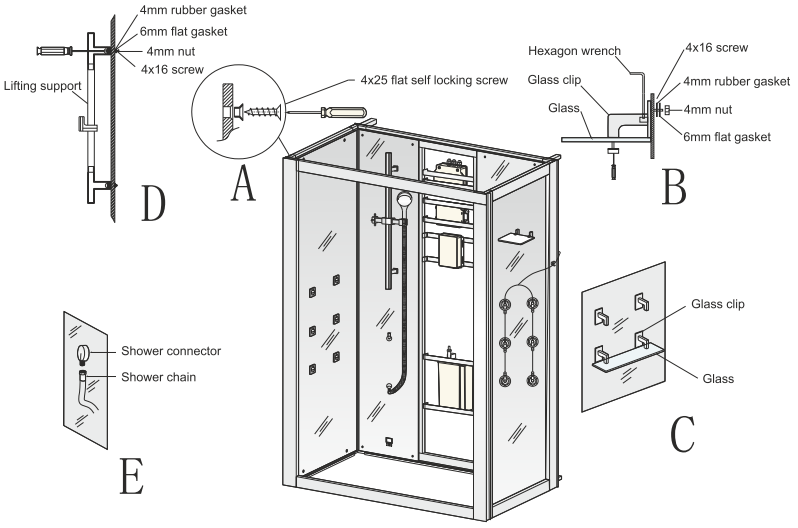

Step 4

Push fixed frame of electrical appliances as corresponding position as picture.

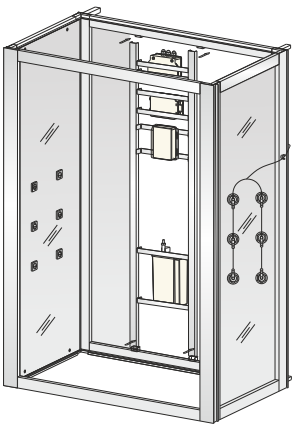

Step 5

1. Put left and right back panels between corner aluminum profile and fixed frame with 4x25 flat self-locking screw as picture A.
2. Install glass clip on the right shower panel as picture B, and fix glass and glass clip with screw as picture C.
3. Fix lifting support to left shower panel with 4x16 screws as picture D.
4. Link shower chain and shower connector as picture E.

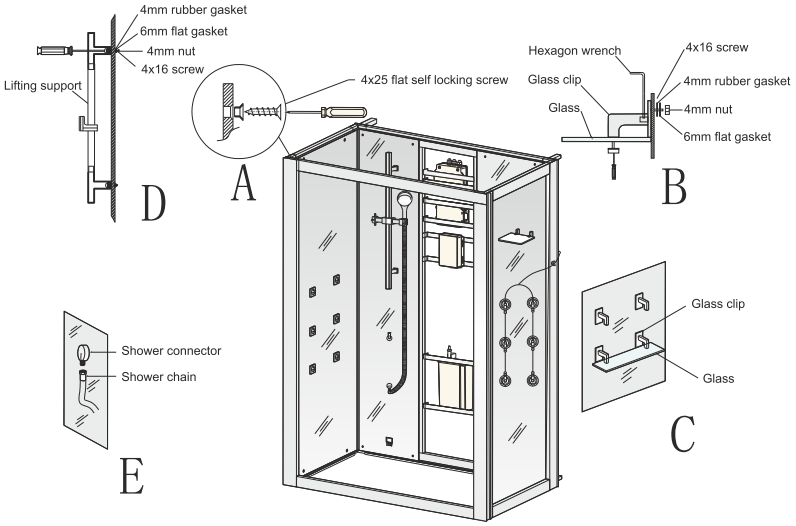

Montage/Installation

Schritt 6

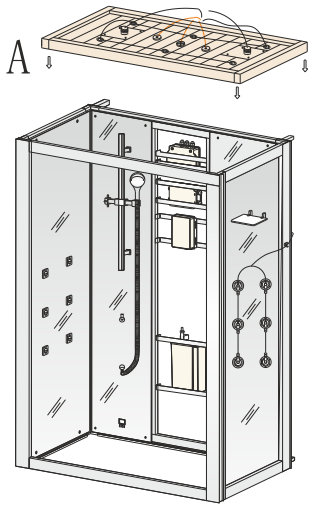

Schritt 7

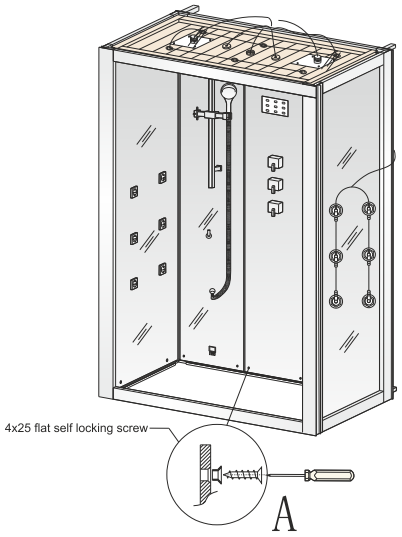

Step 6

1. Put top cover on the top as picture A.
2. Connect ventilator and corresponding plug as directions.

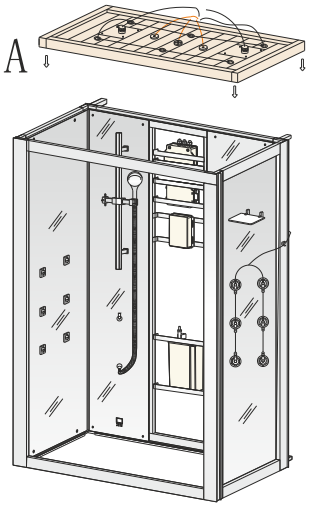

Step 7

Install front fixed doors between corner aluminum profiles and upper&lower fixed aluminum profiles.
Please note there is difference between left glass door and right glass door.
Please check whether the product works well or not before going to the next steps.

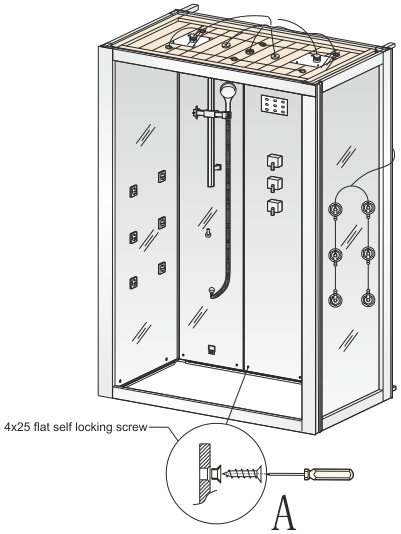

Schritt 8

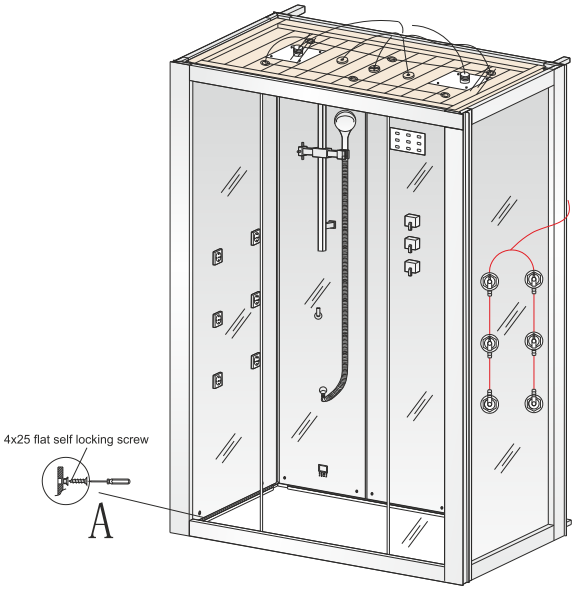

Step 8

Connect all hoses on the middle back panels and fix the middle back panels to the upper&lower fixed aluminum profiles.
Please double check whether it is right after you connect the hoses and electricity lines.

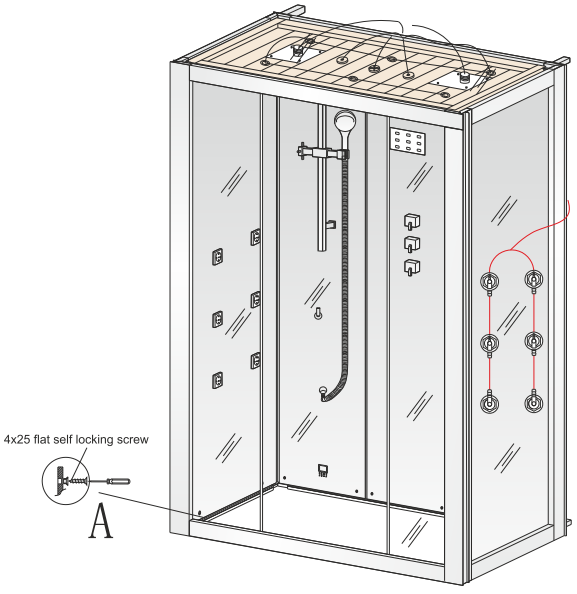

Schritt 9

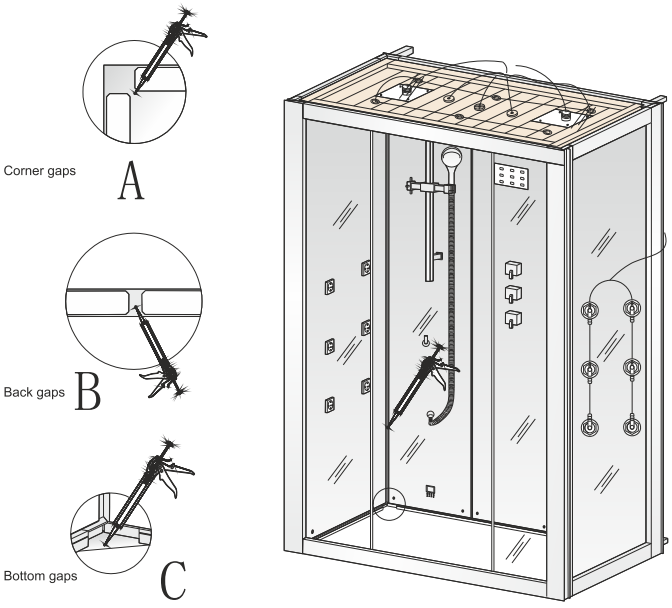

Step 9

Apply glass cement in four corners of glass interfaces as picture A.
Glass interfaces of back panel, please refer to picture B.
Bottom interfaces, please refer to picture C.
Dealing with trim after applying glass cement. It takes 24 hours to solidify.

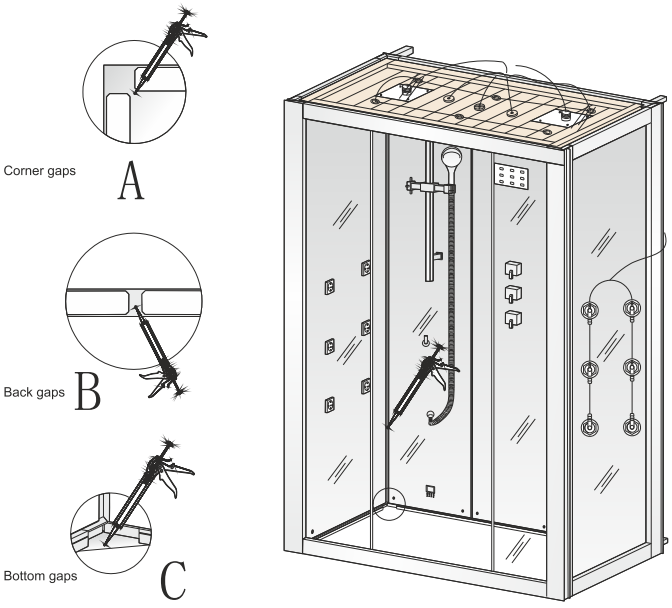

Schritt 10

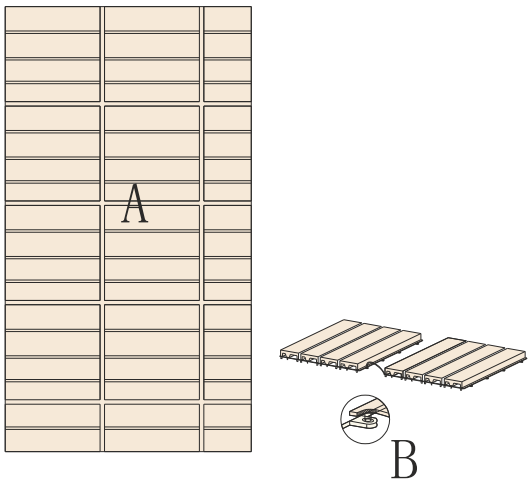

Schritt 11

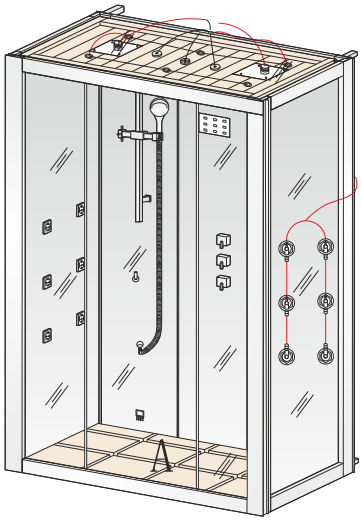

Step 10

Assemble bottom pallet as picture A. Details as picture B.

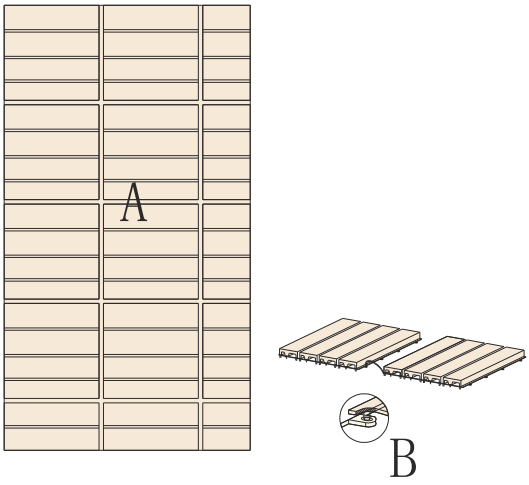

Step 11

Put bottom pallet at corresponding position as picture A.

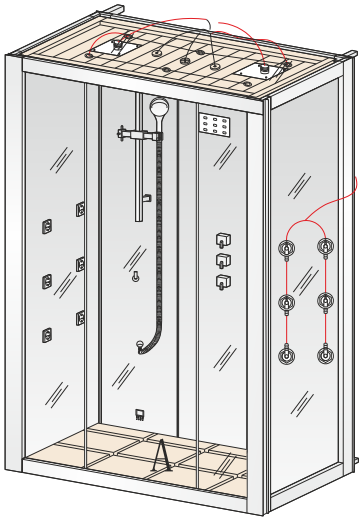

Schritt 12

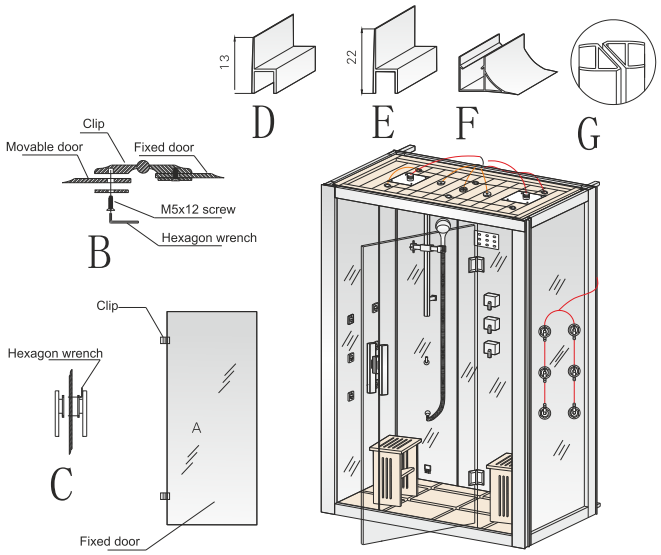

Schritt 13

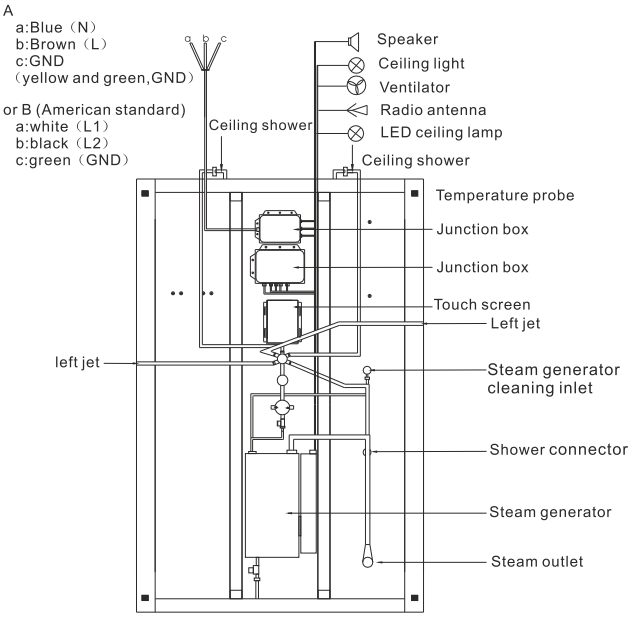

Step 12

1. Connect movable door A and fixed door with clip.(If movable door can not be sealed, please use hexagon wrench to adjust clip as picture B.)
2. Install handle in movable door with hexagon wrench as picture C.
3. Install waterproof seal D on the top of movable door.
4. Install waterproof seal E on the edge of movable door.
5. Install waterproof seal F on the bottom of movable door.
6. Install magnetic strip G on movable door and fixed door.

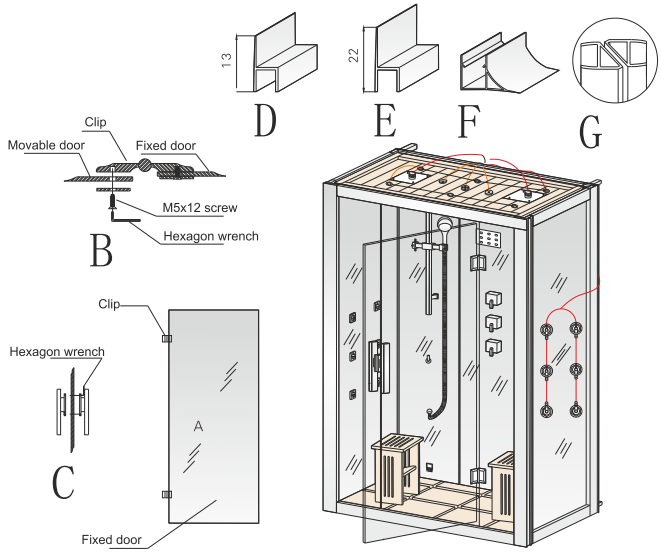

Step 13

Install top shower tube, steam tube, steam drainage tube and cold&hot water pipes. Check and confirm whether functions of steam shower house, fittings and electric appliance work well.

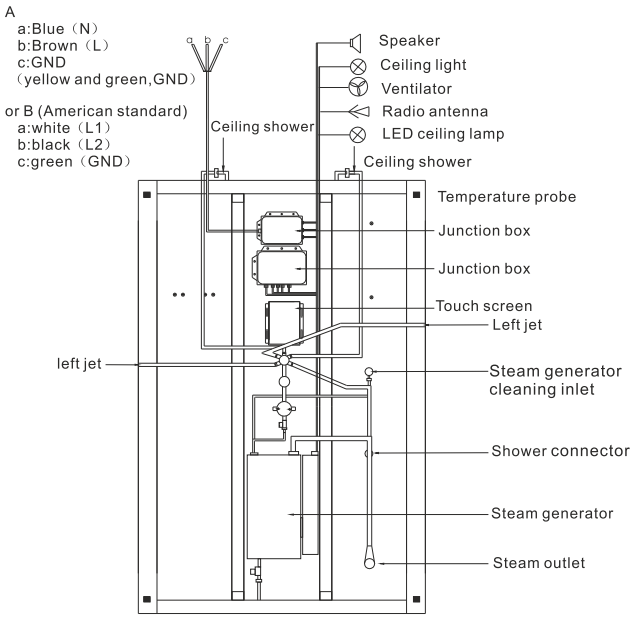

Montage/Installation

Schritt 14

Standard thermostatic faucet

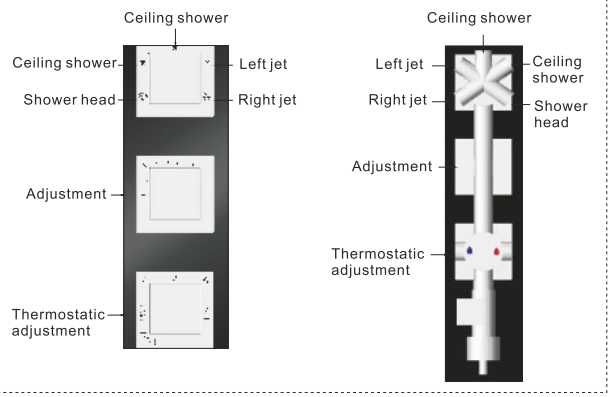

Schritt 1

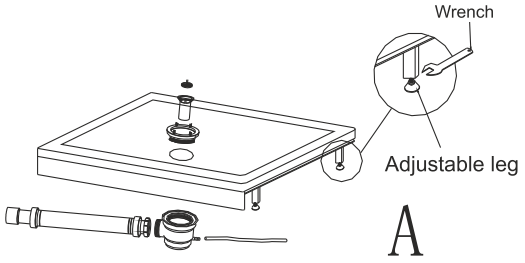

Step 14

Connect Fittings and Water Pipes

Standard thermostatic faucet

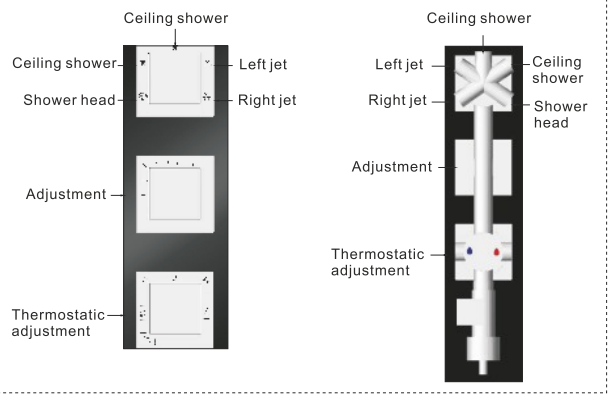

Step 1

1. Put shower tray on installation place and adjust till it meets level condition. Method: put water level on the flat surface of shower tray to check if the shower tray is horizontal or not. If it is not horizontal, please adjust the height of adjustable leg to keep the product horizontal. Refer to picture A.
2. Put drainer on the bottom of shower tray, then connect little silicone tube to the top of drainer.

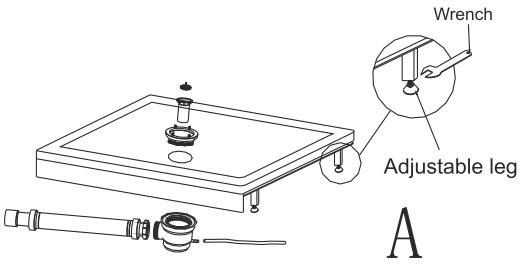

Schritt 2

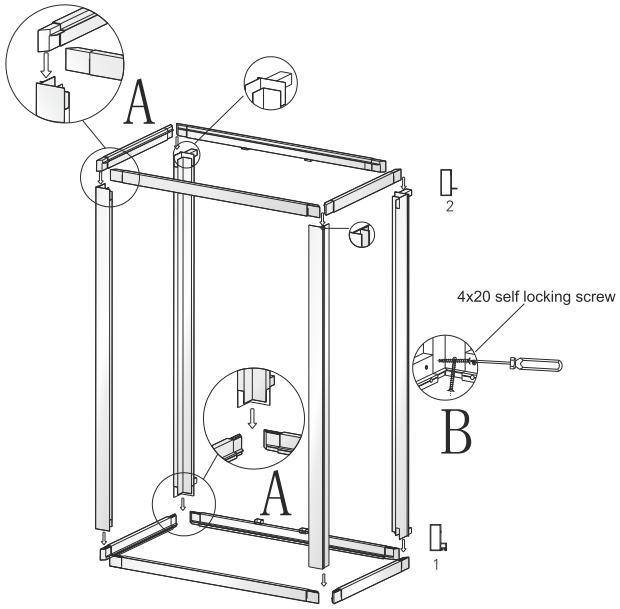

Schritt 3

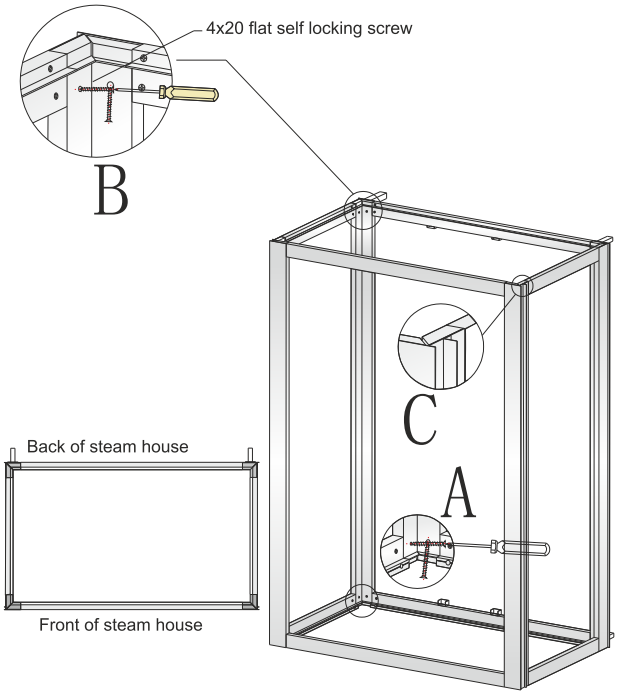

Step 2

Put lower fixed aluminum profile 1 on the ground, then follow picture A to insert corner profiles in lower corner aluminum profile 1 with 4x20 self-locking screw as picture B. Then fix upper fixed aluminum profile 2 to the corners profiles in the same way.

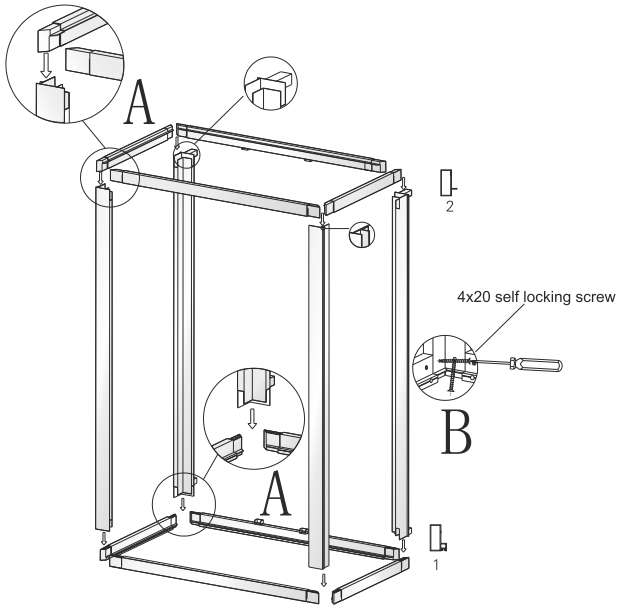

Step 3

Follow picture 2 to screw 8 corners tightly with 4x20 flat self-locking screw as picture A and B. Check and make sure the gap between of aluminum alloy matching surface is less than 0.5 as picture C.

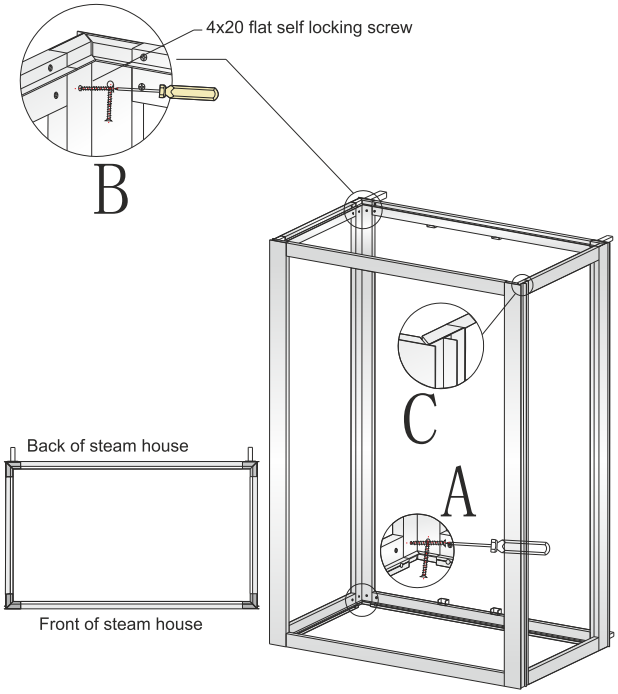

Schritt 4

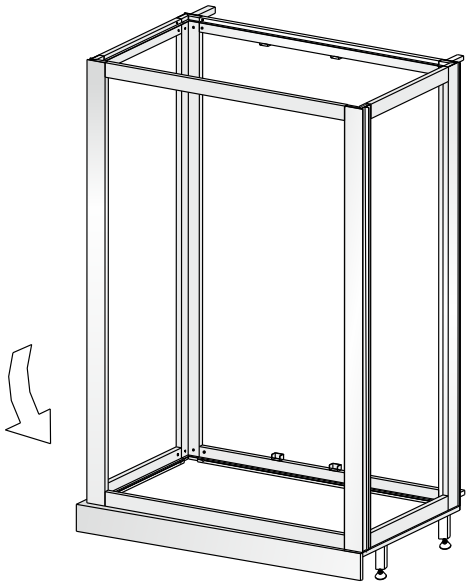

Schritt 5

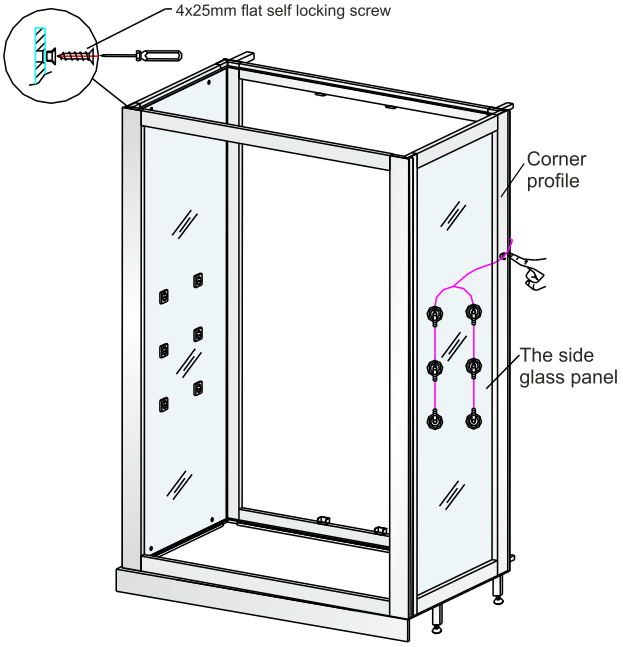

Step 4

Put aluminum profiles on shower tray.

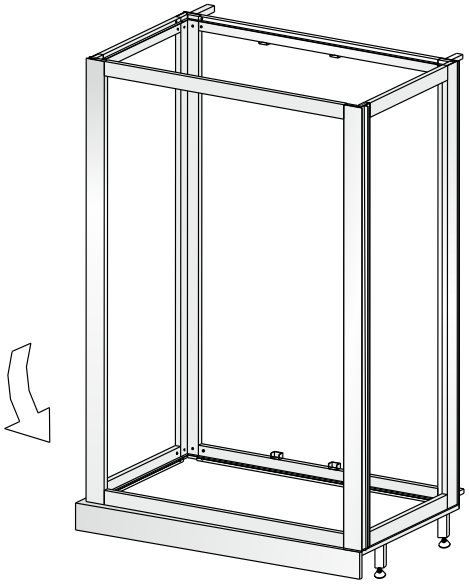

Step 5

Put the side glass panels between side corner profiles. Insert rubber plugs into the hole with 4x25mm flat self-locking screw tightly as picture 3 to fasten the side glass panels. Please use fingers to push water inlet pipes into rubber plugs after installation.

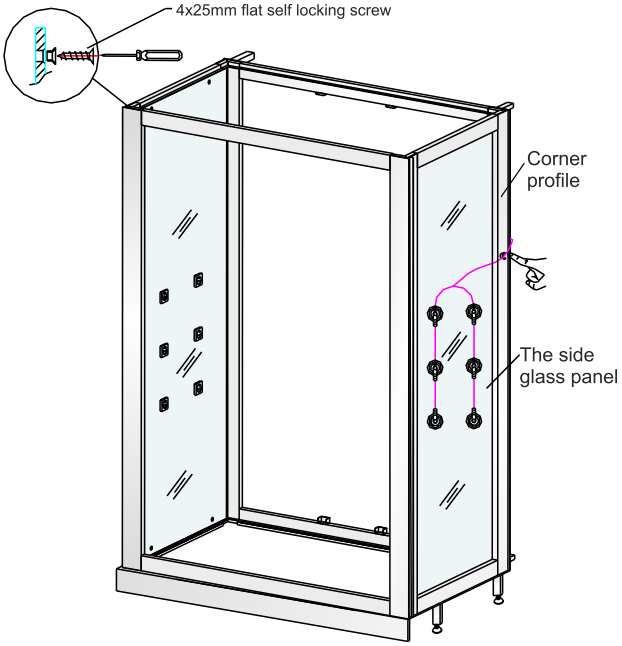

Schritt 6

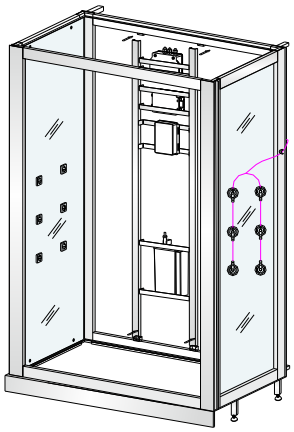

Schritt 7

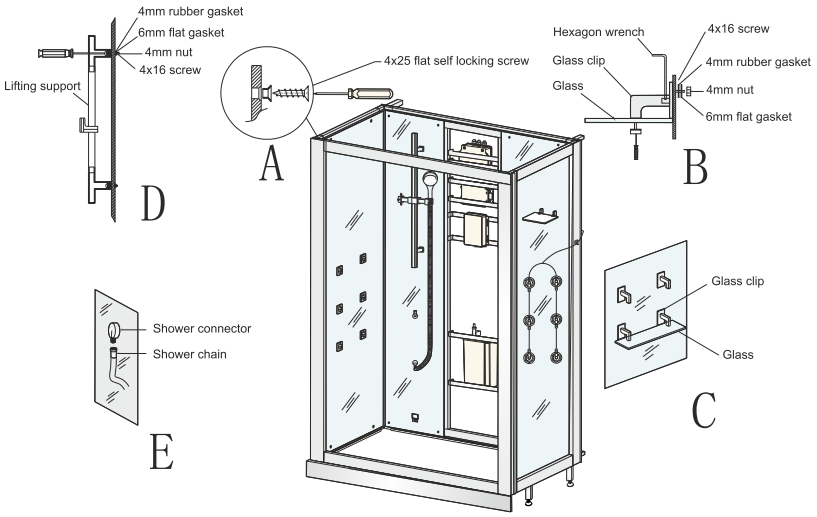

Step 6

Insert and fix all electricity appliances into corresponding position.
Gap tolerance is no more than 1mm.

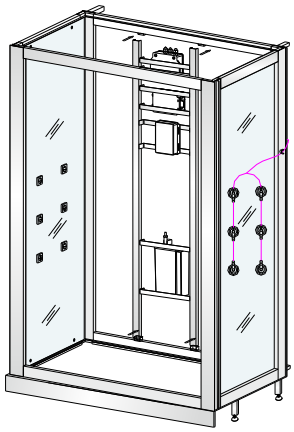

Step 7

1. Put left and right back panels between corner aluminum profile and fixed frame with 4x25 flat self-locking screw as picture A.
2. Install glass clip on the right shower panel as picture B, and fix glass and glass clip with screw as picture C.
3. Fix lifting support to left shower panel with 4x16 screws as picture D.
4. Link shower chain and shower connector as picture E.

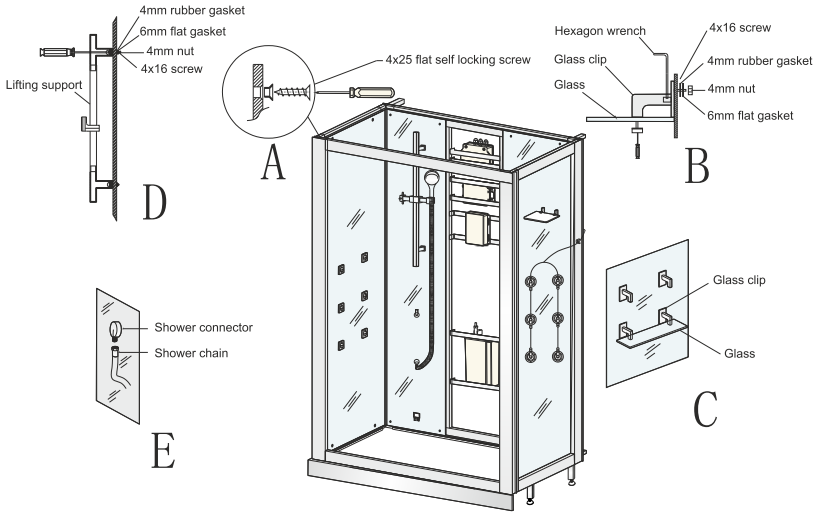

Montage/Installation

Schritt 8

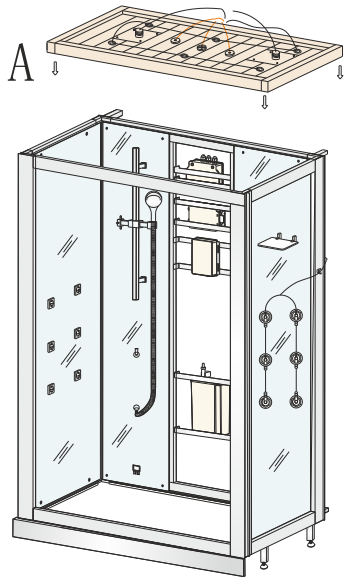

Schritt 9

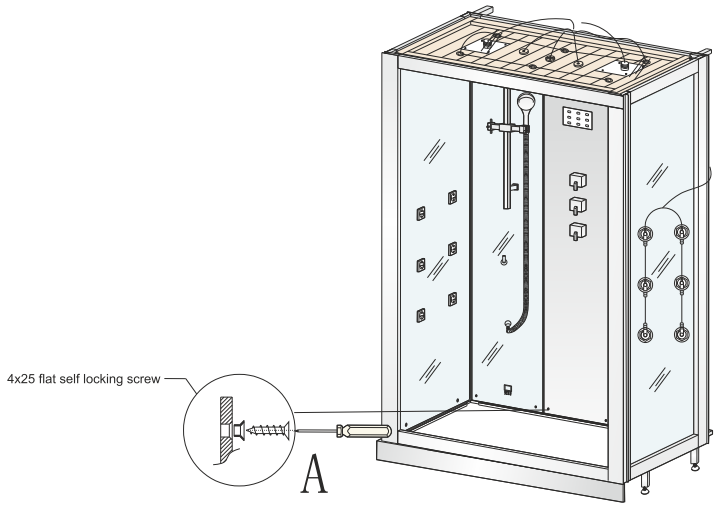

Step 8

1. Put top cover on the top as picture A.
2. Connect ventilator and corresponding plug as directions.

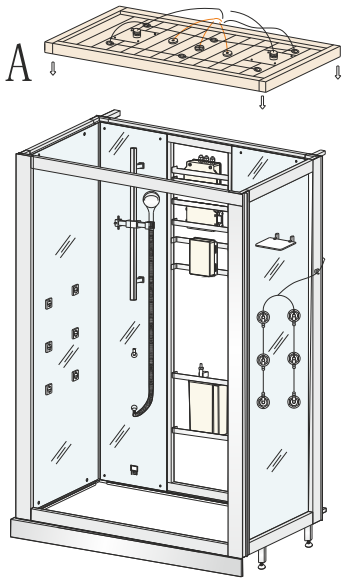

Step 9

Install front fixed doors between corner aluminum profiles and upper&lower fixed aluminum profiles.
Please note there is difference between left glass door and right glass door.
Please check whether the product works well or not before going to the next steps.

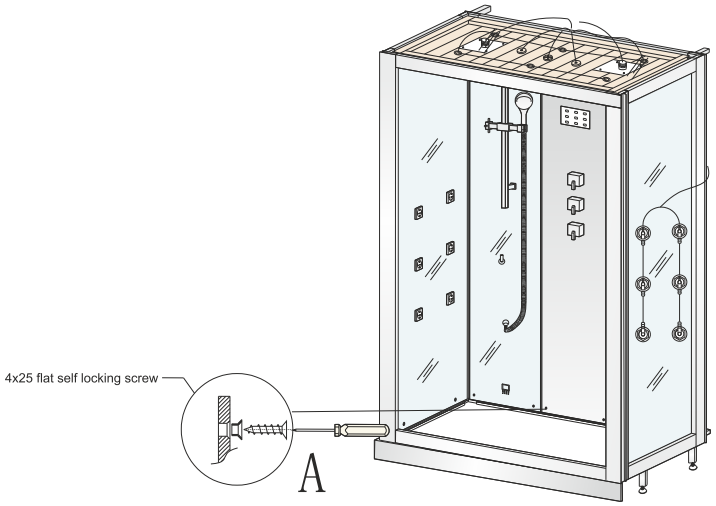

Schritt 10

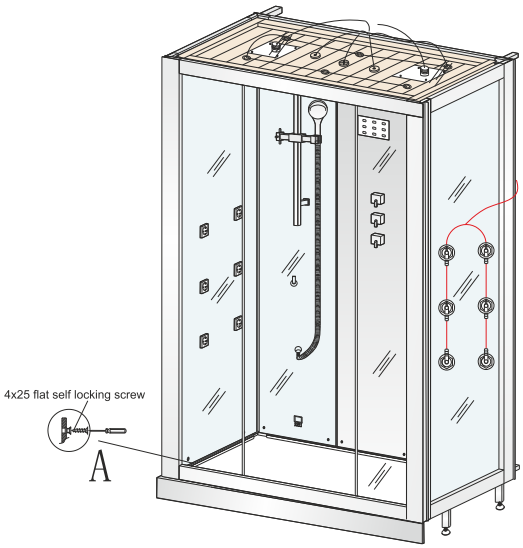

Schritt 11

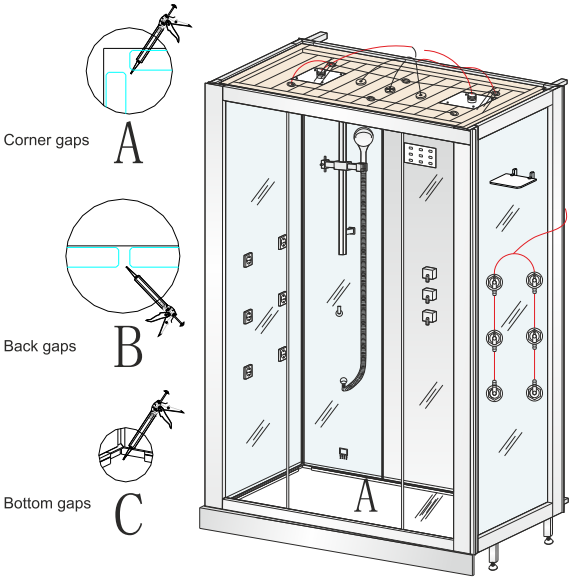

Step 10

Connect all hoses on the middle back panels and fix the middle back panels to the upper&lower fixed aluminum profiles.
Please double check whether it is right after you connect the hoses and electricity lines.

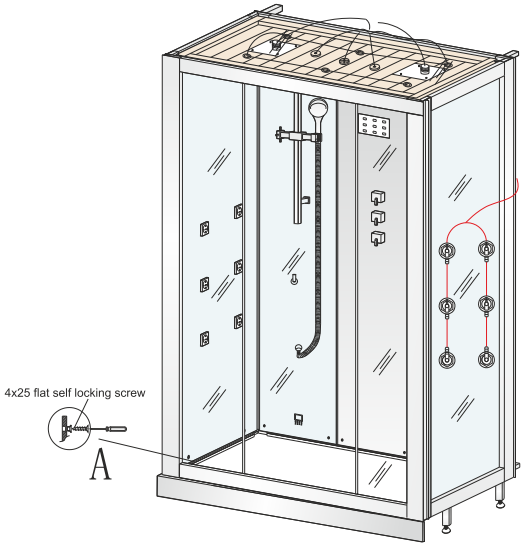

Step 11

Apply glass cement in four corners of glass interfaces as picture A.
Glass interfaces of back panel, please refer to picture B.
Bottom interfaces, please refer to picture C.
Dealing with trim after applying glass cement. It takes 24 hours to solidify.

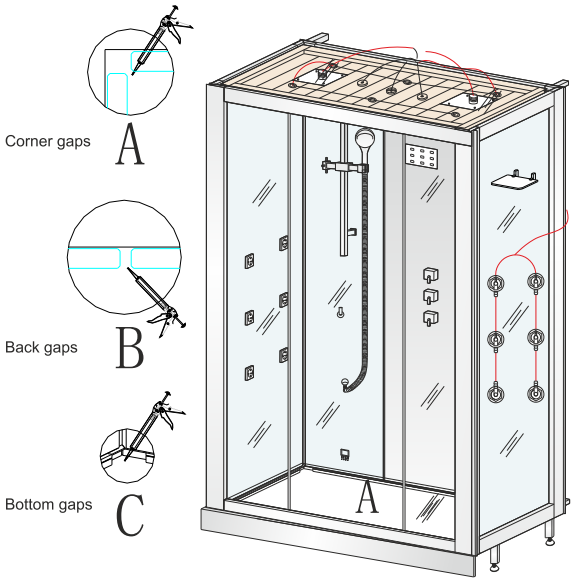

Schritt 12

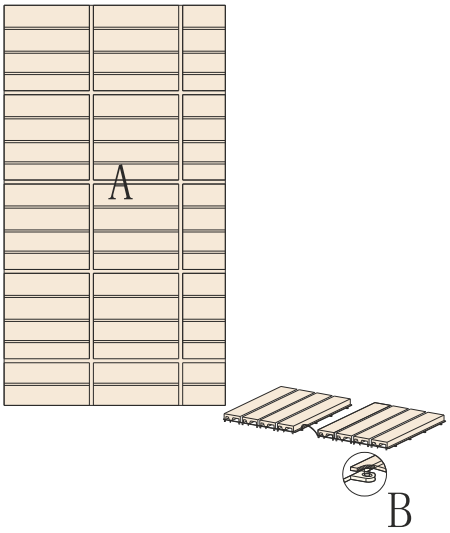

Schritt 13

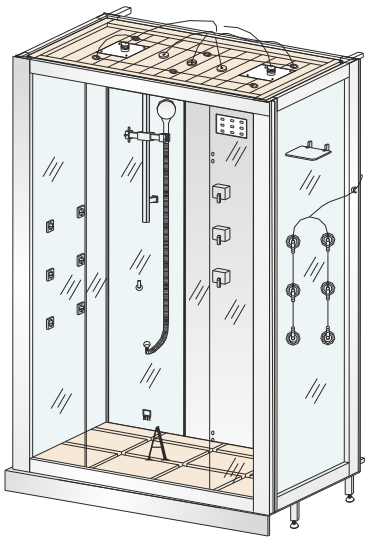

Step 12

Assemble bottom pallet as picture A. Details as picture B.

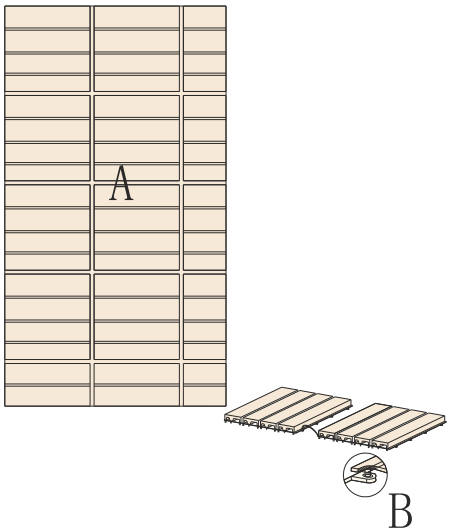

Step 13

Put bottom pallet at corresponding position as picture A.

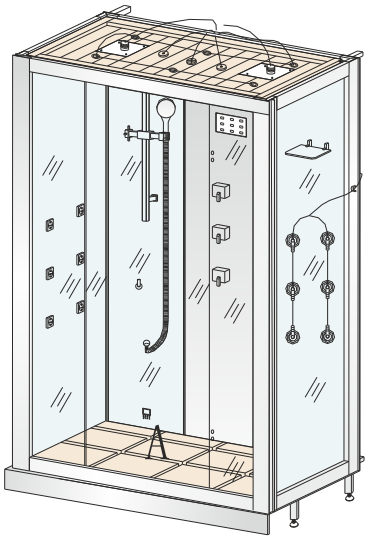

Schritt 14

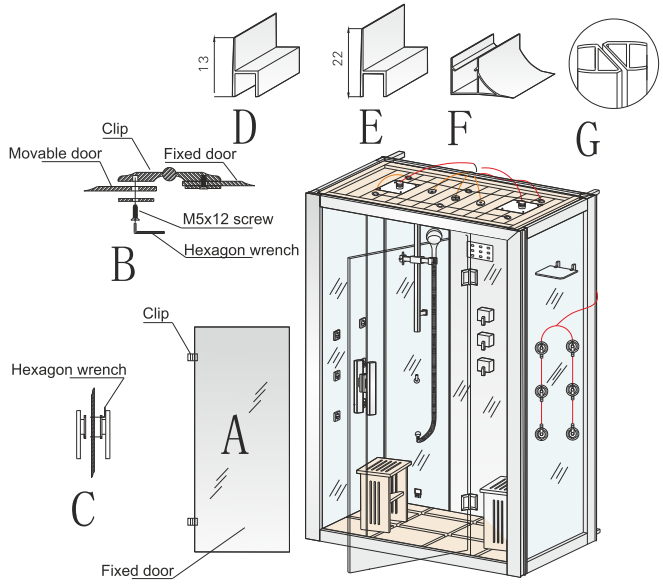

Schritt 15

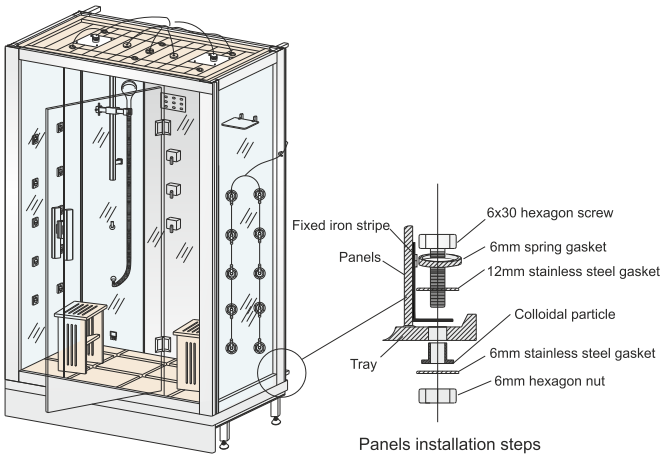

Panels installation steps

Step 14

1. Connect movable door A and fixed door with clip.(If movable door can not be sealed, please use hexagon wrench to adjust clip as picture B.)
2. Install handle in movable door with hexagon wrench as picture C.
3. Install waterproof seal D on the top of movable door.
4. Install waterproof seal E on the edge of movable door.
5. Install waterproof seal F on the bottom of movable door.
6. Install magnetic strip G on movable door and fixed door.

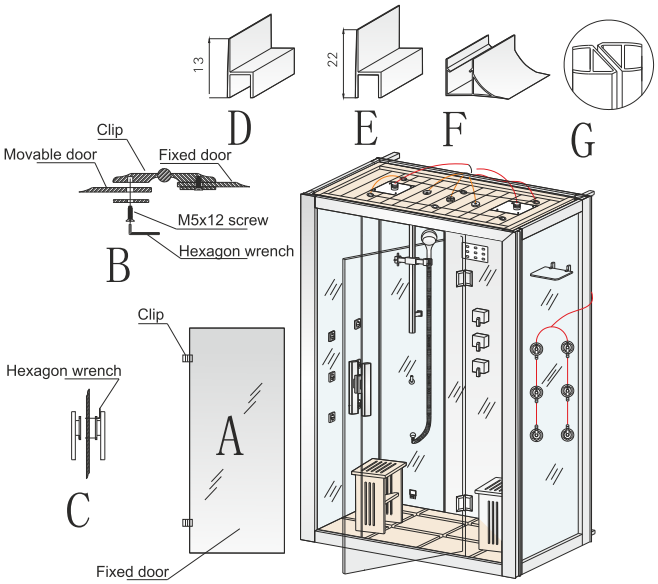

Step 15

Look and fix the aluminum profiles and tray by fixed iron stripe with the help 6x30 screws.

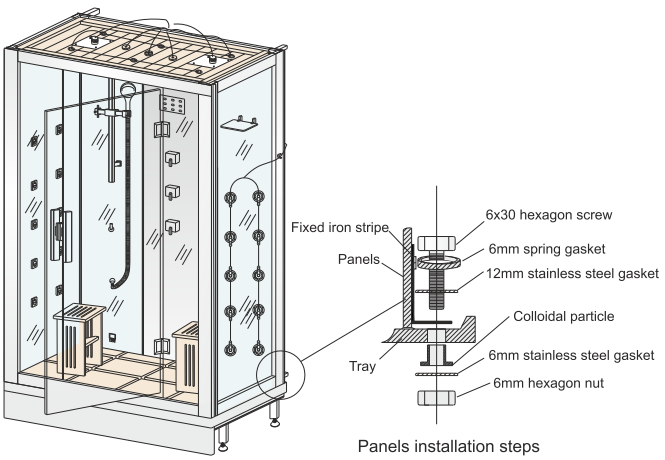

Panels installation steps

Schritt 16

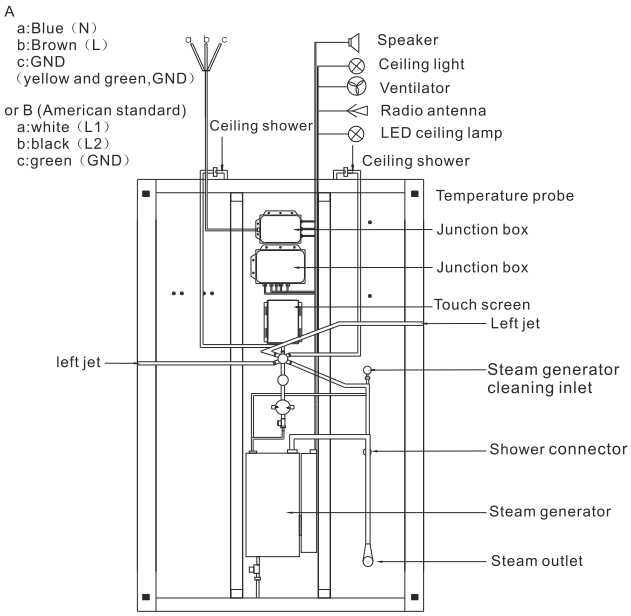

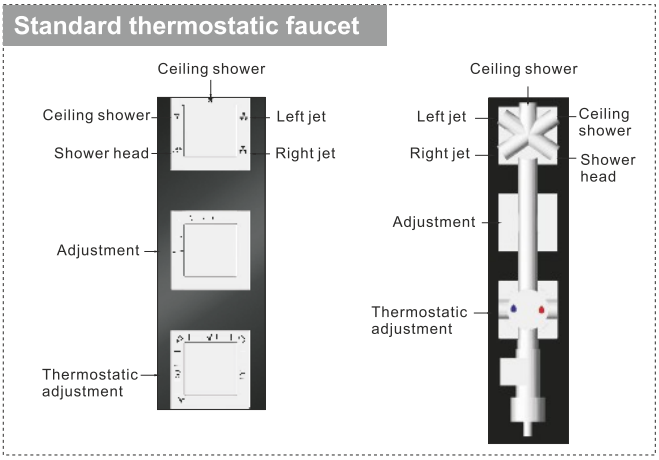

Step 16

Install top shower tube, steam tube, steam drainage tube and cold&hot water pipes. Check and confirm whether functions of steam shower house, fittings and electric appliance work well.

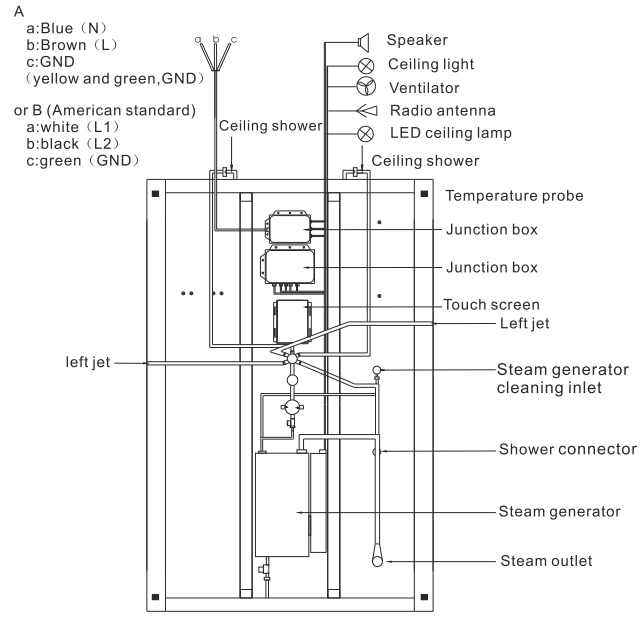

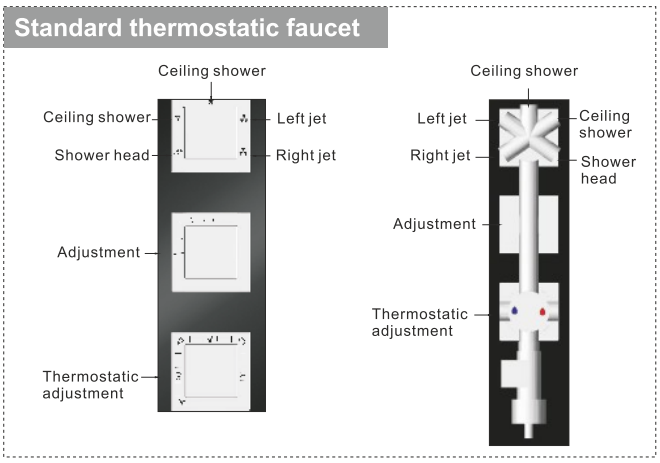

1. Ein/Aus



Das Betätigen der Ein-/Aus-Taste schaltet das System ein. Ein weiteres Betätigen der Taste schaltet das System wieder aus. Erfolgt nach dem Einschalten, 60 Sekunden lang keine Eingabe, schaltet sich das System automatisch aus.

2. Dampf



Mit dieser Taste starten Sie den Dampfgenerator. Im Display wird das Dampf-Symbol und die aktuell eingestellte Temperatur angezeigt.
Ein weiteres Betätigen der Taste schaltet den Dampfgenerator wieder ab.

3. Zeiteinstellung



Bei eingeschaltetem Dampfgenerator können Sie, durch Betätigen dieser Taste, die Laufzeit des Dampfgenerators einstellen.
Jeder Tastendruck erhöht um 1 Minute. Halten Sie die Taste mehr als 1 Sekunde gedrückt, steigert sich die Laufzeit automatisch, bis zur Maximal-Zeit. Dann beginnt die Laufzeit von vorne. Sie können von 5-50 Minuten frei einstellen. Die Werkseitige Einstellung liegt bei 30 Minuten.

4. Temperatur-Einstellung



Wenn Sie diese Taste bei eingeschaltetem Dampfgenerator betätigen, können Sie die Dampftemperatur einstellen. Die Gradzahl wird im Display angezeigt und bei jedem Tastendruck um 1 Grad Celsius erhöht. Halten Sie die Taste länger als 1 Sekunde gedrückt, steigert sich die Temperaturanzeige bis zur Maximal-Anzeige und beginnt anschließend von vorne. Die Temperatur läßt sich zwischen 20 und 50 Grad Celsius frei einstellen. Werkseitig sind 40 Grad Celius eingestellt.

5. Ventilator



Bei Tastendruck startet die Ventilator-Funktion und im Display wird das Ventilator-Symbol angezeigt. Ein erneuter Tastendruck beendet die Funktion.

6. Farblicht-Therapie

Mit dieser Taste starten Sie die Farblicht-Therapie. Ist die Funktion aktiviert, wechselt jeder Tastendruck die Farbe. Der 1. Tastendruck schaltet blau ein, der 2. Tastendruck schaltet blau und rot ein, der 3. Tastendruck schaltet rot ein, der 4. Tastendruck schaltet rot und orange ein, der 5. Tastendruck schaltet orange ein, der 6. Tastendruck schaltet orange und blau ein, der 7. Tastendruck schaltet die Zirkulation ein und der 8. Tastendruck schaltet die Farblicht-Therapie wieder aus. Die Farblicht-Therapie arbeitet in dieser Reihen- folge: Ein - blau - blau und rot - rot -rot und orange - orange - orange und blau - Zirkulation - Aus.



7. Beleuchtung

Mit dieser Taste schalten Sie die Beleuchtung ein und das Lampen-Symbol erscheint im Display. Ein weiterer Tastendruck schaltet die Beleuchtung wieder aus.

8. Radio

Mit der Radio-Taste schalten Sie das Radio ein und aus.



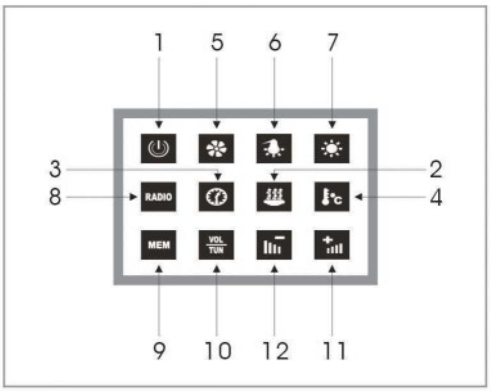

9. Sender-Speicher

Sie haben die Möglichkeit 8 Radio-Sender zu speichern. Ein kurzer Tastendruck wählt den Speicher-Ort. Halten Sie dann die Taste länger als 1 Sekunde gedrückt, wird der aktuell abgespielte Sender abgespeichert.

10. Funktionen

Diese Taste ist mit 2 Funktionen belegt. Ist die Radio-Funktion aktiviert, schaltet der erste Tastendruck in die Frequenzeinstellung. Der 2. Tastendruck schaltet in die Lautstärkenregulierung.



11. Lautstärke +



Haben Sie bei eingeschaltetem Radio die Funktionstaste 10 einmalig gedrückt, können Sie nun mit dieser Taste die Radiofrequenz zwischen 87.5 und 108.0 MHz erhöhen. Halten Sie die Taste länger als 1 Sekunde gedrückt startet der automatische Sendersuchlauf aufwärts bis ein geeigneter Sender gefunden ist. Drücken Sie die Funktionstaste 10 ein zweites Mal, können Sie nun die Lautstärke erhöhen.

12. Lautstärke -



Haben Sie bei eingeschaltetem Radio die Funktionstaste 10 einmalig gedrückt, können Sie nun mit dieser Taste die Radiofrequenz zwischen 87.5 und 108.0 MHz senken. Halten Sie die Taste länger als 1 Sekunde gedrückt startet der automatische Sendersuchlauf abwärts bis ein geeigneter Sender gefunden ist. Drücken Sie die Funktionstaste 10 ein zweites Mal, können Sie nun die Lautstärke senken.

Entkalkungsfunktion

Starten Sie die Entkalkungsfunktion in dieser Reihenfolge:

1. System aus

Um die Entkalkungsfunktion zu starten, schalten Sie das System bitte aus. Öffnen Sie die Entkalkeröffnung nie während des Betriebes, da die Gefahr von Verbrennungen besteht (Bild 1).

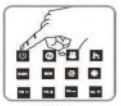
Bild 1

2. Entkalker-Abdeckung öffnen

Nachdem Sie das System ausgeschaltet haben, können Sie die Abdeckung der Entkalker-Öffnung abnehmen.


Bild 2

3. Reiniger einfüllen

Füllen Sie nun mit dem Meßlöffel die benötigte Menge Zitronensäure in die Entkalker-Öffnung.


Bild 3

4. Entkalker-Abdeckung schließen

Verschließen Sie nach dem Einfüllen des Reinigers nun wieder die Entkalker-Öffnung, in dem Sie die Abdeckung im Uhrzeigersinn festdrehen.


Bild 4

5. System ein, Entkalkungsfunktion starten

Schalten Sie nun das System ein. Starten Sie die Entkalkungsfunktion durch Betätigen der Dampf-Funktions-Taste.

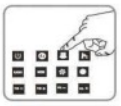
Bild 5

6. System aus, Wasser ablassen

Beenden Sie nach 5-10 Minuten die Dampf-Funktion und stellen Sie nun das System aus. Das Restwasser wird automatisch abgelassen. Die Reinigungs-Funktion ist dann nach 5 Minuten

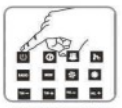
Bild 6

Achtung:

1. Es ist verboten, die Reinigungsfunktion während dem Betrieb anderer Funktionen zu benutzen
2. Chemische Reinigungsmittel sind verboten
3. Führen Sie die Entkalkungsfunktion des Dampfgenerators nicht bei verstopften Leitungen durch.

Wir empfehlen zur Reinigung des Dampfgenerators flüssige Zitronensäure zu benutzen

1. Power key

Press to switch on the steam room, press again to switch it off . The steam room will shut down in 60 minutes automatically.（As picture1）



As picture1

2. Steam key

Press The steam generator starts working. The temperature will be shown on the control panel like the picture 2.

Press while the system is off for 2 seconds to starts the water draining function, let go the button to stop the function.



As picture2

Automatic water draining function: drain water for 5 minutes after the system is off for 40 minutes.

The icon will flick when the function turns on with the uull water level, otherwise the iron is silent.

Ambient temperature<=setting temperature-2 two sets of fuse starts to work; ambient temperature> setting temperature then heater stop working.

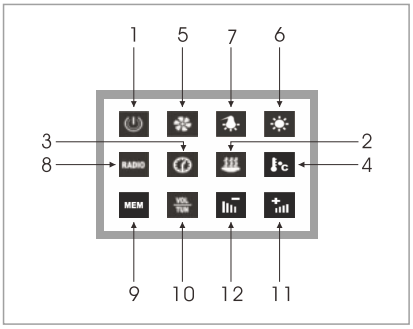

3. Time adjusting

When the steam function starts to work, press for more than 1 second the setting time will be increased continuously as picture 3. When it reaches to the maximum level and will return to the minimum level automatically. The time setting range is between 5-50 minutes. The default setting time is 30 minutes.



As picture3

4. Temperature adjusting key

After steam function is turned on, press will increase the temperature. When press more than 1 second, the setting temperature will be increased continously until you stop pressing Or,just when it reaches the maximum limitting temperature that it will return to the minimum limitting temperature automatically.



As picture4

Note:The temperature setting range is between 20 ℃-50℃.The controlled temperature tolerance: ±3℃ The default temperature is 40℃.

Press for 2 seconds to change the temperature unit before start the steam function.

5. Ventilator key

Press to turn on the ventilator , press again to turn off the ventilator.



As picture5

6. Color light key

Press to turn on the color light. After the color light is turned on, each more press will change the different colors of the light. The color light works in this sequence: Turn on, blue ---blue and red ---red-----red and orange---orange ---orange and blue---blue---circulating---turn off.

Press the key for 2 seconds to turns off the function

7. Lamp key

Press the key to turn on the lamp, press again and turn it off. (As picture 6)



As picture6

8. Radio key

Press key to turns on the radio, press again to turns off the radio and turns on the bluetooth; press for the third time to turns off the multimedia. When the Bluetooth turns on the icon lighten as picture 7 and 7-1.



As picture7

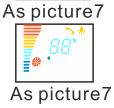

As picture7 -1

The phone icon lightens when answering the call. Press to answer the call. And press to finish the call.

Note: Please connect the mobile phone to the system while using the Bluetooth function.

The Bluetooth will disconnect after the system turns off for 10 seconds. It shows bt. F while no Bluetooth connected and bt while the Bluetooth connects well.

It shows bt. n when switch to next song, the password is "0000",

The Bluetooth name is "SANJUN BT".

9. Channel memory key

Press and release within 1 second, the frequency of current channel will be changed; Press and hold it more than 1 second, the frequency of current chanel will be saved.It can memory total 8 channels.

To refuse the call please press key.



As picture8

10. Select key

This key gets double functions. When the radio is turned on, this key shows the Frequency function.Press the key and it can be switched from the frequency to the volume function. Press the key, on the Displayer will show like the (Picture 10) or (picture 9). (Picture 9) is for volume and (picture 10) is for frequency.



As picture9

Press to adjust volume and switch song while the Bluetooth turns on ad picture 9 and 9-1. Picture 9 shows the volume adjustment. 9-1 shows the song switch.



As picture9-1

11. Volume up key

After the radio is turned on (As picture9), press will increase the volume. Hold on the key more than 1 second, volume will keep increasing until the key is released. When(picture10) showes on the displayer, press will increase the frequency.Hold on the key more than 1 second, the frequency will keep increasing until the key is released.



As pictur10

12. Volume down key

After the radio is turned on, when (Picture 9) is shown on the displayer, press will decrease the volume. Hold on the key more than 1 second, volumed will keep decreasing until the key is released. When (picture10) is shown on the displayer,press will decrease the frequency.Hold on the key more than 1 second, the frequency will keep decreasing until the key is released.

13. Fault code

Code	Fault	Solution
E1	Recognition error	Please change a new main engine.
E2	Communication error	Check whether the communication connection is normal, the main engine.
E4	Water inlet overtime	Check whether the water connection is normal.
E5	Water inlet failure	Check whether the water connection is normal.
E8	Temperature probe is open circuit	Check whether the line connection is faulty, or replace the temperature.
E9	Temperature probe is short circuit	Check whether the line connection is faulty, or replace the temperature.

User's manual for cleaning the steem generator

Using steps: Turn off the power first, and then open the lid of cleanning cup, put the cleaning liquid in the cleanning cup, after that, cover the lid back. Now turn on the power , start the steam function to make the self-cleaning function work, later turn off the power, and pipe water away.

1).Power off

For safety, it is strictly prohibited to open the lid of the easy cleaning cup during using. In order to avoid steam gas emits out and scald users, please shut down all other functions before using the steam generator cleaning function. (As picture 11)

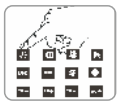
(As picture1)

2).Open the easy cleaning cup

After Making sure all of functions are turned off, find out the cleaning cup according the right picture illustrated, and rotate the lid of the cleaning cup to the reverse direction, and then take the lid out slightly. (As picture12)

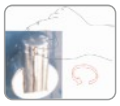
(As picture2)

3).put the cleaning liquid

After openning the cleanning cup, use a spoon to take a proper amount of cleaning liquid, such as Citric acid, or neutral compound cleaning liquid (around 5 ml) to put in the cleaning cup. Note: If the cleaning material is solid, first, please dissolve it with water to prevent blcoking.Strictly prohibit to use any other acid, alkaline compounds to be pour ed into the cleanning cup directly(As picture13).


(As picture3)

4).Cover the lid

After adding the cleaning liquid, cover the lid back and turn it in clockwise direction to fasten,like this can prevent the steam emitting out to scald users(As picture14).

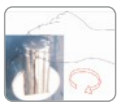
(As picture4)

5).Turn on and start the steam function

After covering the lid, press to turn on the steam generator function, and the system will begin to clean the steam box automatically.(As picture15)


(As picture5)

6).Turn off the power and drain out the waste water

After 5-10 minutes, press the to turn off the steam generator, then press the , the waste water will be drained out automatically(As picture16).


(As picture6)

Notice:
1.Strictly prohibit to use the cleaning function while any other function is on;
2. Strictly prohibit to use any other alkaline cleaning compound to clean steam generator;
3. Strictly prohibit to use any solid cleaning agent to clean steam generator,in order to avoid blocking the pipe.
We recommend that you use citric acid solution to clean steam generator!

EAGO Deutschland GmbH
Auf dem Großen Damm 13-17
47546 Kalkar

Telefon +49(0)2824-80686-0
E-Mail info@eago.de
Web www.eago.de